PRELIMINARY
SITE CONSTRUCTION DRAWINGS
FOR
THE LOFTS AT INDIAN MEADOWS
INDIAN MEADOW DRIVE
FAIRFIELD TWP, BUTLER COUNTY, OHIO
2017

PROJECT NARRATIVE

PROPOSED CONSTRUCTION OF AN APARTMENT COMPLEX WITH AND CREATION OF RETAIL OUTLOTS.

BENCHMARKS

ALL BENCH MARKS AND ELEVATIONS SHOWN UPON THIS PLAN ARE BASED ON THE (NAVD 83) NORTH AMERICAN VERTICAL DATUM OF 2011 (U.S. SURVEY FEET):

BENCHMARK #4
EX SANITARY MANHOLE LID, AS SHOWN ON PLAN.

ELEV = 747.62
NORTHING = 1251.47
EASTING = 6730.12

BENCHMARK #6
EX BACK OF CURB ON TRAFFIC ISLAND, AS SHOWN ON PLAN.

ELEV = 739.44
NORTHING = 1375.69
EASTING = 7718.41

BENCHMARK #7
EX TRAFFIC BOX LID, AS SHOWN ON PLAN.

ELEV = 748.41
NORTHING = 1251.47
EASTING = 7608.82

BENCHMARK #8
EX HEADWALL, AS SHOWN ON PLAN.

ELEV = 747.33
NORTHING = 963.76
EASTING = 7356.97

BENCHMARK #9
EX HEADWALL, AS SHOWN ON PLAN.

ELEV = 784.81
NORTHING = 880.85
EASTING = 7022.08

UTILITY CONTACTS

GAS COMPANY
DUKE ENERGY
MIKE FABENDER
PH. 513.287.4718

ELECTRIC COMPANY
DUKE ENERGY
MIKE FABENDER
PH. 513.287.4718

COMMUNICATION
CINCINNATI BELL TELEPHONE
201 E. FOURTH ST
CINCINNATI, OHIO 45201
NANCY MORRIS
PH. 513.566.8039

WATER AND SANITARY SEWERS
BUTLER COUNTY ENVIRONMENTAL SERVICES
130 HIGH ST
SIXTH FLOOR
HAMILTON, OHIO 45011
MARTHA SHELBY, P.E.
PH. 513.887.5699

STORM SEWER
BUTLER COUNTY ENGINEERS OFFICE
1921 FAIRGROVE AVE.
HAMILTON, OHIO 45011
DALE SCHWEITERMAN, P.E.
PH. 513.785.4110

INDEX MAP
SCALE: 1"=100'

LOCATION MAP
NOT TO SCALE

DEVELOPER:
VCARVE CONSTRUCTIONS, LLC
1941 ALDA COURT
DAYTON, OH 45459
CONTACT: SAM ECHURI
PHONE: 937.546.5687

SHEET INDEX

COVER SHEET....C000
GENERAL NOTES....C001
SITE DETAILS....C002
EXISTING CONDITION AND DEMO PLAN....C100
SITE PLAN....C200
GRADING PLAN....C300
UTILITY PLAN....C400
ILLUMINATION PLAN....C500
LANDSCAPE PLAN....L100

ENGINEER

Mannik Smith GROUP
TECHNICAL SKILL. CREATIVE SPIRIT.
www.MannikSmithGroup.com

CONTACT: STEVEN E. FOX, P.E.
MAILING ADDRESS: 1160 DUBLIN ROAD, SUITE 100
COLUMBUS, OH 43215-1052
PHONE: (614) 441-4222
EMAIL ADDRESS: SFOX@MANNIKSMITHGROUP.COM

OHIO REGISTERED PROFESSIONAL ENGINEER DATE

NO.	DATE	BY	DESCRIPTION
1	10/13/2017	RJT	CONDITIONAL USE PERMIT
2	11/16/2017	RJT	REVISIONS PER TOWNSHIP & NEIGHBOR COMMENTS
3	12/15/2017	RJT	REVISED CONDITIONAL USE PERMIT SUBMITTAL

10200 ALLIANCE ROAD
SUITE 125
CINCINNATI, OH 45242-3222
TEL: 513.437.322
FAX: 888.488.7340

PROJECT DATE: 09/15/2017
PROJECT NO.: V1680001
DRAWN BY: DES
CHECKED BY: RJT

Mannik Smith GROUP
TECHNICAL SKILL. CREATIVE SPIRIT.
www.MannikSmithGroup.com

PREPARED FOR:
VCARVE CONSTRUCTIONS, LLC
1941 ALDA COURT
DAYTON, OH 45459

THE LOFTS AT INDIAN MEADOWS
MIXED-USE DEVELOPMENT
ROUTE 4 & INDIAN MEADOWS DRIVE
HAMILTON, OHIO 45011

COVER SHEET

C000

W:\Projects\Projects U-Z\V1680001\CAD\SITE PLANS\V1680001 - C000 - COVER SHEET.DWG - Last printed 12/14/2017 3:06 PM

EARTHWORK–GENERAL

DETERMINATION OF SITE EARTHWORK EXCAVATION AND EMBANKMENT QUANTITIES SHALL BE IN ACCORDANCE WITH THE FOLLOWING CRITERIA:

THE CONTRACTOR SHALL BE RESPONSIBLE FOR THE SUITABILITY OF SOILS TO BE USED AS EMBANKMENTS FOR PARKING LOTS, BUILDING PADS, ETC.

STOCKPILING OF TOP SOIL AND/OR EXCESS MATERIAL FOR THESE IMPROVEMENTS OR OFFSITE HAULING OF TOPSOIL/SUITABLE MATERIAL, ETC. SHALL BE COORDINATED WITH THE OWNER. APPROPRIATE MEANS FOR SEDIMENTATION CONTROL OF THE ONSITE STOCKPILES SHALL BE PROVIDED AS A MATTER OF GENERAL PRACTICE IN ACCORDANCE WITH THE REQUIRED STANDARDS REFERENCED AS A PART OF THE SEDIMENT AND EROSION DETAILS. IT IS THE CONTRACTORS RESPONSIBILITY TO ASSURE THAT A SUFFICIENT AMOUNT OF TOPSOIL REMAINS SO THAT ANY LANDSCAPING AND LANDSCAPE MOUNDING CAN BE COMPLETED.

SURFACE GRADING TOLERANCE FOR HARD SURFACE AREAS (PARKING LOTS, ROADWAYS, DRIVES, CURBS, ETC.) SHALL NOT DEVIATE MORE THAN 0.1' AT PROPOSED SUBGRADE SURFACE. LANDSCAPE GRADING TOLERANCE SHALL NOT DEVIATE MORE THAN 0.3' FROM PROPOSED SURFACE ELEVATION.

GENERAL SITE EARTHWORK OPERATIONS (PREPARATION OF PAVEMENT SUBGRADES, ETC.) ALONG WITH REQUIREMENT STANDARDS (COMPACTION, PROOFROLLING, ETC.) SHALL BE IN ACCORDANCE WITH THE SOILS REPORT. COPIES OF THE SOILS REPORT SHOULD BE OBTAINED FROM THE OWNER OR OWNER'S REPRESENTATIVE.

ALL EARTHWORK OPERATIONS SHALL BE OBSERVED AND TESTED BY THE SITE SOILS ENGINEER EMPLOYED AND PAID FOR BY THE OWNER. ADDITIONALLY, ALL FINAL GRADES SHALL BE FIELD CHECKED BY AN AGENT OF THE OWNER UPON COMPLETION OF CONTRACTOR'S OPERATIONS TO DETERMINE IF THE SITE HAS BEEN CONSTRUCTED TO THE GRADES INDICATED.

TEMPORARY AND/OR PERMANENT SEEDING WITHIN THE DESIGNATED WORK LIMITS SHALL BE PERFORMED AT THE DIRECTION OF THE OWNER IN ACCORDANCE WITH THE CONTRACT DOCUMENTS. REQUIREMENTS FOR SEEDING MIX, RATE OF APPLICATION, ETC. SHALL AS SHOWN ON THE LANDSCAPE PLAN.

EARTHWORK–SPECIFICATIONS

PART 1 – PRODUCTS

1.1 SOIL MATERIALS

A. GENERAL: PROVIDE BORROW SOIL MATERIALS WHEN SUFFICIENT SATISFACTORY SOIL MATERIALS ARE NOT AVAILABLE FROM EXCAVATIONS.

B. SATISFACTORY SOILS: ASTM D 2487 SOIL CLASSIFICATION GROUPS GW, GP, GM, SW, SP, AND SM, OR A COMBINATION OF THESE GROUPS; FREE OF ROCK OR GRAVEL LARGER THAN 3 INCHES IN ANY DIMENSION, DEBRIS, WASTE, FROZEN MATERIALS, VEGETATION, AND OTHER DELETERIOUS MATTER.

C. UNSATISFACTORY SOILS: SOIL CLASSIFICATION GROUPS GC, SC, CL, ML, OL, CH, MH, OH, AND PT ACCORDING TO ASTM D 2487, OR A COMBINATION OF THESE GROUPS.

1. UNSATISFACTORY SOILS ALSO INCLUDE SATISFACTORY SOILS NOT MAINTAINED WITHIN 2 PERCENT OF OPTIMUM MOISTURE CONTENT AT TIME OF COMPACTION.

D. SUBBASE MATERIAL: NATURALLY OR ARTIFICIALLY GRADED MIXTURE OF NATURAL OR CRUSHED GRAVEL, CRUSHED STONE, AND NATURAL OR CRUSHED SAND; ASTM D 2940; WITH AT LEAST 90 PERCENT PASSING A 1–1/2–INCH SIEVE AND NOT MORE THAN 12 ERCENT PASSING A NO. 200 SIEVE.

E. BASE COURSE: NATURALLY OR ARTIFICIALLY GRADED MIXTURE OF NATURAL OR CRUSHED GRAVEL, CRUSHED STONE, AND NATURAL OR CRUSHED SAND; ASTM D 2940; WITH AT LEAST 95 PERCENT PASSING A 1–1/2–INCH SIEVE AND NOT MORE THAN 8 PERCENT PASSING A NO. 200 SIEVE.

F. ENGINEERED FILL: NATURALLY OR ARTIFICIALLY GRADED MIXTURE OF NATURAL OR CRUSHED GRAVEL, CRUSHED STONE, AND NATURAL OR CRUSHED SAND; ASTM D 2940; WITH AT LEAST 90 PERCENT PASSING A 1–1/2–INCH SIEVE AND NOT MORE THAN 12 PERCENT PASSING A NO. 200 SIEVE.

G. BEDDING COURSE: NATURALLY OR ARTIFICIALLY GRADED MIXTURE OF NATURAL OR CRUSHED GRAVEL, CRUSHED STONE, AND NATURAL OR CRUSHED SAND; ASTM D 2940; EXCEPT WITH 100 PERCENT PASSING A 1–INCH SIEVE AND NOT MORE THAN 8 PERCENT PASSING A NO. 200 SIEVE.

H. DRAINAGE COURSE: NARROWLY GRADED MIXTURE OF WASHED CRUSHED STONE, OR CRUSHED OR UNCRUSHED GRAVEL; ASTM D 448; COARSE–AGGREGATE GRADING SIZE 57; WITH 100 PERCENT PASSING A 1–1/2–INCH SIEVE AND 0 TO 5 PERCENT PASSING A NO. 8 SIEVE.

PART 2 – EXECUTION

2.1 PREPARATION

A. PROTECT STRUCTURES, UTILITIES, SIDEWALKS, PAVEMENTS, AND OTHER FACILITIES FROM DAMAGE CAUSED BY SETTLEMENT, LATERAL MOVEMENT, UNDERMINING, WASHOUT, AND OTHER HAZARDS CREATED BY EARTHWORK OPERATIONS.

B. PROTECT AND MAINTAIN EROSION AND SEDIMENTATION CONTROLS DURING EARTHWORK OPERATIONS.

2.2 EXCAVATION

A UNCLASSIFIED EXCAVATION: EXCAVATE TO SUBGRADE ELEVATIONS REGARDLESS OF THE CHARACTER OF SURFACE AND SUBSURFACE CONDITIONS ENCOUNTERED. UNCLASSIFIED EXCAVATED MATERIALS MAY INCLUDE ROCK, SOIL MATERIALS, AND OBSTRUCTIONS. NO CHANGES IN THE CONTRACT SUM OR THE CONTRACT TIME WILL BE AUTHORIZED FOR ROCK EXCAVATION OR REMOVAL OF OBSTRUCTIONS.

1. IF EXCAVATED MATERIALS INTENDED FOR FILL AND BACKFILL INCLUDE UNSATISFACTORY SOIL MATERIALS AND ROCK, REPLACE WITH SATISFACTORY SOIL MATERIALS.

2.3 EXCAVATION FOR STRUCTURES

A. EXCAVATE TO INDICATED ELEVATIONS AND DIMENSIONS WITHIN A TOLERANCE OF PLUS OR MINUS 1 INCH. IF APPLICABLE, EXTEND EXCAVATIONS A SUFFICIENT DISTANCE FROM STRUCTURES FOR PLACING AND REMOVING CONCRETE FORMWORK, FOR INSTALLING SERVICES AND OTHER CONSTRUCTION, AND FOR INSPECTIONS.

B. EXCAVATIONS FOR FOOTINGS AND FOUNDATIONS: DO NOT DISTURB BOTTOM OF EXCAVATION. EXCAVATE BY HAND TO FINAL GRADE JUST BEFORE PLACING CONCRETE REINFORCEMENT. TRIM BOTTOMS TO REQUIRED LINES AND GRADES TO LEAVE SOLID BASE TO RECEIVE OTHER WORK.

2.4 EXCAVATION FOR WALKS AND PAVEMENTS

A. EXCAVATE SURFACES UNDER WALKS AND PAVEMENTS TO INDICATED LINES, CROSS SECTIONS, ELEVATIONS, AND SUBGRADES.

2.5 EXCAVATION FOR UTILITY TRENCHES

A. EXCAVATE TRENCHES TO INDICATED GRADIENTS, LINES, DEPTHS, AND ELEVATIONS.

B. EXCAVATE TRENCHES TO UNIFORM WIDTHS TO PROVIDE THE FOLLOWING CLEARANCE ON EACH SIDE OF PIPE OR CONDUIT. EXCAVATE TRENCH WALLS VERTICALLY FROM TRENCH BOTTOM TO 12 INCHES HIGHER THAN TOP OF PIPE OR CONDUIT, UNLESS OTHERWISE INDICATED.

C. CLEARANCE: 12 INCHES EACH SIDE OF PIPE OR CONDUIT.

D. TRENCH BOTTOMS: EXCAVATE AND SHAPE TRENCH BOTTOMS TO PROVIDE UNIFORM BEARING AND SUPPORT OF PIPES AND CONDUIT. SHAPE SUBGRADE O PROVIDE CONTINUOUS SUPPORT FOR BELLS, JOINTS, AND BARRELS OF PIPES AND FOR JOINTS, FITTINGS, AND BODIES OF CONDUITS. REMOVE PROJECTING STONES AND SHARP OBJECTS ALONG TRENCH SUBGRADE.

1. EXCAVATE TRENCHES 6 INCHES DEEPER THAN ELEVATION REQUIRED IN ROCK OR OTHER UNYIELDING BEARING MATERIAL, 4 INCHES DEEPER ELSEWHERE, TO ALLOW FOR BEDDING COURSE.

2.6 SUBGRADE INSPECTION

A. PROOF–ROLL SUBGRADE BELOW THE BUILDING SLABS AND PAVEMENTS WITH HEAVY PNEUMATIC–TIRED EQUIPMENT TO IDENTIFY SOFT POCKETS AND AREAS OF EXCESS YIELDING. DO NOT PROOF–ROLL WET OR SATURATED SUBGRADES.

B. RECONSTRUCT SUBGRADES DAMAGED BY FREEZING TEMPERATURES, FROST, RAIN, ACCUMULATED WATER, OR CONSTRUCTION ACTIVITIES, AS DIRECTED BY ARCHITECT, WITHOUT ADDITIONAL COMPENSATION.

2.7 UNAUTHORIZED EXCAVATION

A. FILL UNAUTHORIZED EXCAVATION UNDER FOUNDATIONS OR WALL FOOTINGS BY EXTENDING BOTTOM ELEVATION OF CONCRETE FOUNDATION OR FOOTING TO EXCAVATION BOTTOM, WITHOUT ALTERING TOP ELEVATION. COMPACTED ODOT 304 OR LEAN CONCRETE FILL, WITH 28–DAY COMPRESSIVE STRENGTH OF 1500 PSI, MAY BE USED WHEN APPROVED BY ARCHITECT.

A. FILL UNAUTHORIZED EXCAVATIONS UNDER OTHER CONSTRUCTION OR UTILITY PIPE AS DIRECTED BY ARCHITECT.

2.8 STORAGE OF SOIL MATERIALS

A. STOCKPILE BORROW SOIL MATERIALS AND EXCAVATED SATISFACTORY SOIL MATERIALS WITHOUT INTERMIXING. PLACE, GRADE, AND SHAPE STOCKPILES TO DRAIN SURFACE WATER. COVER TO PREVENT WINDBLOWN DUST.

1. STOCKPILE SOIL MATERIALS AWAY FROM EDGE OF EXCAVATIONS. DO NOT STORE WITHIN DRIP LINE OF REMAINING TREES.

2.9 UTILITY TRENCH BACKFILL

A. PLACE BACKFILL ON SUBGRADES FREE OF MUD, FROST, SNOW, OR ICE.

B. PLACE AND COMPACT BEDDING COURSE ON TRENCH BOTTOMS AND WHERE INDICATED. SHAPE BEDDING COURSE TO PROVIDE CONTINUOUS SUPPORT FOR BELLS, JOINTS, AND BARRELS OF PIPES AND FOR JOINTS, FITTINGS, AND BODIES OF CONDUITS.

C. BACKFILL TRENCHES EXCAVATED UNDER FOOTINGS AND WITHIN 18 INCHES OF BOTTOM OF FOOTINGS WITH SATISFACTORY SOIL; FILL WITH CONCRETE TO ELEVATION OF BOTTOM OF FOOTINGS. CONCRETE IS SPECIFIED IN DIVISION 32 SECTION "CONCRETE PAVING."

D. PROVIDE 4–INCH– THICK, CONCRETE–BASE SLAB SUPPORT FOR PIPING OR CONDUIT LESS THAN 18 INCHES BELOW SURFACE OF ROADWAYS. AFTER INSTALLING AND TESTING, COMPLETELY ENCASE PIPING OR CONDUIT IN A MINIMUM OF 4 INCHES OF CONCRETE BEFORE BACKFILLING OR PLACING ROADWAY SUBBASE.

E. PLACE AND COMPACT INITIAL BACKFILL OF SATISFACTORY SOIL, FREE OF PARTICLES LARGER THAN 1 INCH IN ANY DIMENSION, TO A HEIGHT OF 12 INCHES OVER THE UTILITY PIPE OR CONDUIT.

1. CAREFULLY COMPACT INITIAL BACKFILL UNDER PIPE HAUNCHES AND COMPACT EVENLY UP ON BOTH SIDES AND ALONG THE FULL LENGTH OF UTILITY PIPING OR CONDUIT TO AVOID DAMAGE OR DISPLACEMENT OF PIPING OR CONDUIT. COORDINATE BACKFILLING WITH UTILITIES TESTING.

F. PLACE AND COMPACT FINAL BACKFILL OF SATISFACTORY SOIL TO FINAL SUBGRADE ELEVATION.

G. INSTALL WARNING TAPE DIRECTLY ABOVE UTILITIES, 12 INCHES BELOW FINISHED GRADE, EXCEPT 6 INCHES BELOW SUBGRADE UNDER PAVEMENTS AND SLABS.

2.10 SOIL FILL

A. PLOW, SCARIFY, BENCH, OR BREAK UP SLOPED SURFACES STEEPER THAN 1 VERTICAL TO 4 HORIZONTAL SO FILL MATERIAL WILL BOND WITH EXISTING MATERIAL.

B. PLACE AND COMPACT FILL MATERIAL IN LAYERS TO REQUIRED ELEVATIONS AS FOLLOWS:

1. UNDER GRASS AND PLANTED AREAS, USE SATISFACTORY SOIL MATERIAL.

2. UNDER WALKS AND PAVEMENTS, USE SATISFACTORY SOIL MATERIAL.

3. UNDER STEPS AND RAMPS, USE ENGINEERED FILL.

4. UNDER BUILDING SLABS, USE ENGINEERED FILL.

5. UNDER FOOTINGS AND FOUNDATIONS, USE ENGINEERED FILL.

2.11 SOIL MOISTURE CONTROL

A. UNIFORMLY MOISTEN OR AERATE SUBGRADE AND EACH SUBSEQUENT FILL OR BACKFILL SOIL LAYER BEFORE COMPACTION TO WITHIN 2 PERCENT OF OPTIMUM MOISTURE CONTENT.

1. DO NOT PLACE BACKFILL OR FILL SOIL MATERIAL ON SURFACES THAT ARE MUDDY, FROZEN, OR CONTAIN FROST OR ICE.

2. REMOVE AND REPLACE, OR SCARIFY AND AIR DRY OTHERWISE SATISFACTORY SOIL MATERIAL THAT EXCEEDS OPTIMUM MOISTURE CONTENT BY 2 PERCENT AND IS TOO WET TO COMPACT TO SPECIFIED DRY UNIT WEIGHT.

2.12 COMPACTION OF SOIL BACKFILLS AND FILLS

A. PLACE BACKFILL AND FILL SOIL MATERIALS IN LAYERS NOT MORE THAN 8 INCHES IN LOOSE DEPTH FOR MATERIAL COMPACTED BY HEAVY COMPACTION EQUIPMENT, AND NOT MORE THAN 4 INCHES IN LOOSE DEPTH FOR MATERIAL COMPACTED BY HAND–OPERATED TAMPERS.

B. PLACE BACKFILL AND FILL SOIL MATERIALS EVENLY ON ALL SIDES OF STRUCTURES TO REQUIRED ELEVATIONS, AND UNIFORMLY ALONG THE FULL LENGTH OF EACH STRUCTURE.

C. COMPACT SOIL MATERIALS TO NOT LESS THAN THE FOLLOWING PERCENTAGES OF MAXIMUM DRY UNIT WEIGHT ACCORDING TO ASTM D 698:

1. UNDER STRUCTURES, BUILDING SLABS, STEPS, AND PAVEMENTS, SCARIFY AND RECOMPACT TOP 12 INCHES OF EXISTING SUBGRADE AND EACH LAYER OF BACKFILL OR FILL SOIL MATERIAL AT 98 PERCENT.

a. THE LIMITS FOR COMPACTION SHALL BE WITHIN A LINE TEN FEET OUTSIDE THE STRUCTURE OR PAVEMENT AND DOWN TO EXISTING A SLOPE OF TWO HORIZONTAL TO ONE VERTICAL.

3. UNDER WALKWAYS, SCARIFY AND RECOMPACT TOP 6 INCHES BELOW SUBGRADE AND COMPACT EACH LAYER OF BACKFILL OR FILL SOIL MATERIAL AT 98 PERCENT.

4. UNDER LAWN OR UNPAVED AREAS, SCARIFY AND RECOMPACT TOP 6 INCHES BELOW SUBGRADE AND COMPACT EACH LAYER OF BACKFILL OR FILL SOIL MATERIAL AT 90 PERCENT.

5. FOR UTILITY TRENCHES, COMPACT EACH LAYER OF INITIAL AND FINAL BACKFILL SOIL MATERIAL AT 98 PERCENT.

2.13 GRADING

A. GENERAL: UNIFORMLY GRADE AREAS TO A SMOOTH SURFACE, FREE OF IRREGULAR SURFACE CHANGES. COMPLY WITH COMPACTION REQUIREMENTS AND GRADE TO CROSS SECTIONS, LINES, AND ELEVATIONS INDICATED.

B. SITE GRADING: SLOPE GRADES TO DIRECT WATER AWAY FROM BUILDINGS AND TO PREVENT PONDING. FINISH SUBGRADES TO REQUIRED ELEVATIONS WITHIN THE FOLLOWING TOLERANCES:

1. LAWN OR UNPAVED AREAS: PLUS OR MINUS 1 INCH.

2. WALKS: PLUS OR MINUS 1/2 INCH.

3. PAVEMENTS: PLUS OR MINUS 1/2 INCH.

C. GRADING INSIDE BUILDING LINES: FINISH SUBGRADE TO A TOLERANCE OF 1/2 INCH WHEN TESTED WITH A 10–FOOT STRAIGHTEDGE.

2.14 SUBBASE AND BASE COURSES

A. PLACE BASE COURSE ON SUBGRADES FREE OF MUD, FROST, SNOW, OR ICE.

B. ON PREPARED SUBGRADE, PLACE SUBBASE COURSE UNDER PAVEMENTS AND WALKS AS FOLLOWS:

1. SHAPE SUBBASE COURSE TO REQUIRED CROWN ELEVATIONS AND CROSS–SLOPE GRADES.

2. COMPACT SUBBASE COURSE AT OPTIMUM MOISTURE CONTENT TO REQUIRED GRADES, LINES, CROSS SECTIONS, AND THICKNESS TO NOT LESS THAN 98 PERCENT OF MAXIMUM DRY UNIT WEIGHT ACCORDING TO ASTM D 698.

2.15 DRAINAGE COURSE

A. PLACE DRAINAGE COURSE ON SUBGRADES FREE OF MUD, FROST, SNOW, OR ICE.

B. ON PREPARED SUBGRADE, PLACE AND COMPACT DRAINAGE COURSE UNDER CAST–IN–PLACE CONCRETE SLABS–ON–GRADE AS FOLLOWS:

1. PLACE DRAINAGE COURSE THAT EXCEEDS 6 INCHES IN COMPACTED THICKNESS IN LAYERS OF EQUAL THICKNESS, WITH NO COMPACTED LAYER MORE THAN 6 INCHES THICK OR LESS THAN 3 INCHES THICK.

2. COMPACT EACH LAYER OF DRAINAGE COURSE TO REQUIRED CROSS SECTIONS AND THICKNESSES TO NOT LESS THAN 98 PERCENT OF MAXIMUM DRY UNIT WEIGHT ACCORDING TO ASTM D 698.

2.16 FIELD QUALITY CONTROL

A. TESTING AGENCY: OWNER WILL ENGAGE A QUALIFIED GEOTECHNICAL ENGINEERING TESTING AGENCY TO PERFORM TESTS AND INSPECTIONS.

B. ALLOW TESTING AGENCY TO INSPECT AND TEST SUBGRADES AND EACH FILL OR BACKFILL LAYER. PROCEED WITH SUBSEQUENT EARTH MOVING ONLY AFTER TEST RESULTS FOR PREVIOUSLY COMPLETED WORK COMPLY WITH REQUIREMENTS.

C. FOOTING SUBGRADE: AT FOOTING SUBGRADES, AT LEAST ONE TEST OF EACH SOIL STRATUM WILL BE PERFORMED TO VERIFY DESIGN BEARING CAPACITIES. SUBSEQUENT VERIFICATION AND APPROVAL OF OTHER FOOTING SUBGRADES MAY BE BASED ON A VISUAL COMPARISON OF SUBGRADE WITH TESTED SUBGRADE WHEN APPROVED BY ARCHITECT.

D. TESTING AGENCY WILL TEST COMPACTION OF SOILS IN PLACE ACCORDING TO ASTM D 1556, ASTM D 2167, ASTM D 2922, AND ASTM D 2937, AS APPLICABLE. TESTS WILL BE PERFORMED AT THE FOLLOWING LOCATIONS AND FREQUENCIES:

1. PAVED AND BUILDING SLAB AREAS: AT SUBGRADE AND AT EACH COMPACTED FILL AND BACKFILL LAYER, AT LEAST ONE TEST FOR EVERY 2000 SQ. FT. OR LESS OF PAVED AREA OR BUILDING SLAB, BUT IN NO CASE FEWER THAN THREE TESTS.

3. FOUNDATION WALL BACKFILL: AT EACH COMPACTED BACKFILL LAYER, AT LEAST ONE TEST FOR EVERY 100 FEET OR LESS OF WALL LENGTH, BUT NO FEWER THAN TWO TESTS.

4. TRENCH BACKFILL: AT EACH COMPACTED INITIAL AND FINAL BACKFILL LAYER, AT LEAST ONE TEST FOR EVERY 150 FEET OR LESS OF TRENCH LENGTH, BUT NO FEWER THAN TWO TESTS.

E. WHEN TESTING AGENCY REPORTS THAT SUBGRADES, FILLS, OR BACKFILLS HAVE NOT ACHIEVED DEGREE OF COMPACTION SPECIFIED, SCARIFY AND MOISTEN OR AERATE, OR REMOVE AND REPLACE SOIL MATERIALS TO DEPTH REQUIRED; RECOMPACT AND RETEST UNTIL SPECIFIED COMPACTION IS OBTAINED.

2.17 PROTECTION

A. PROTECTING GRADED AREAS: PROTECT NEWLY GRADED AREAS FROM TRAFFIC, FREEZING, AND EROSION. KEEP FREE OF TRASH AND DEBRIS.

B. REPAIR AND REESTABLISH GRADES TO SPECIFIED TOLERANCES WHERE COMPLETED OR PARTIALLY COMPLETED SURFACES BECOME ERODED, RUTTED, SETTLED, OR WHERE THEY LOSE COMPACTION DUE TO SUBSEQUENT CONSTRUCTION OPERATIONS OR WEATHER CONDITIONS.

1. SCARIFY OR REMOVE AND REPLACE SOIL MATERIAL TO DEPTH AS DIRECTED BY ARCHITECT; RESHAPE AND RECOMPACT.

C. WHERE SETTLING OCCURS BEFORE PROJECT CORRECTION PERIOD ELAPSES, REMOVE FINISHED SURFACING, BACKFILL WITH ADDITIONAL SOIL MATERIAL, COMPACT, AND RECONSTRUCT SURFACING.

1. RESTORE APPEARANCE, QUALITY, AND CONDITION OF FINISHED SURFACING TO MATCH ADJACENT WORK, AND ELIMINATE EVIDENCE OF RESTORATION TO GREATEST EXTENT POSSIBLE.

2.18 DISPOSAL OF SURPLUS AND WASTE MATERIALS

A. REMOVE SURPLUS SATISFACTORY SOIL AND WASTE MATERIALS, INCLUDING UNSATISFACTORY SOIL, TRASH, AND DEBRIS, AND LEGALLY DISPOSE OF THEM OFF OWNER'S PROPERTY.

1. REMOVE WASTE MATERIALS, INCLUDING UNSATISFACTORY SOIL, TRASH, AND DEBRIS, AND LEGALLY DISPOSE OF THEM OFF OWNER'S PROPERTY.

NON–RUBBER TIRED VEHICLES

NON–RUBBER TIRED VEHICLES SHALL NOT BE MOVED ON PUBLIC STREETS, EXISTING PRIVATE ROADWAYS OR PARKING LOTS. NO EXCEPTIONS SHALL BE GRANTED.

WHERE POTENTIAL GRADE CONFLICTS MIGHT OCCUR WITH EXISTING UTILITIES, THE CONTRACTOR WILL BE REQUIRED TO UNCOVER SUCH UTILITIES SUFFICIENTLY IN ADVANCE OF LAYING PIPE OR DUCT AND PROVIDE THE ENGINEER THE LOCATION AND ELEVATION OF SAID UTILITY SO THE ENGINEER CAN DETERMINE IF ANY ADJUSTMENTS ARE NECESSARY.

THE NOTIFICATION OF AFFECTED UTILITY OWNERS IN ADVANCE OF CONSTRUCTION AND EXACT LOCATION AND PROTECTION OF UTILITIES ARE THE RESPONSIBILITY OF THE CONTRACTOR. IF DAMAGE IS CAUSED, THE CONTRACTOR SHALL BE RESPONSIBLE FOR THE REPAIR OF THE SAME AND FOR ANY RESULTING CONTINGENT DAMAGE.

PERMITS

THE CONTRACTOR IS TO OBTAIN ALL NECESSARY PERMITS. AN ORIGINAL PERMIT WITH SIGNATURES SHALL BE KEPT ONSITE AT ALL TIMES.

SITE VISIT

THE CONTRACTOR SHALL PERFORM FIELD RECONNAISSANCE TO BECOME ACQUAINTED WITH THE EXISTING SITE CONDITIONS AND THE POTENTIAL AFFECTS UPON THE WORK SCOPE. ANY PERFORMANCE OF ADDITIONAL SITE SUBSURFACE INVESTIGATIONS (TEST HOLES) SHALL BE COORDINATED IN ADVANCE WITH THE OWNER AS WARRANTED. EXCAVATED MATERIAL SHALL BE REPLACED IN A CONTROLLED MANNER TO MINIMIZE IMPACT ON FIELD EARTHWORK OPERATIONS.

TRENCHES

ALL TRENCHES THAT CROSS PAVEMENT OR WHERE THE FRONT FACE OF TRENCHES, PARALLELING THE PAVEMENT IS WITHIN 24" OF THE FACE OF CURB OR EDGE OF PAVEMENT SHALL BE BACKFILLED WITH COMPACTED GRANULAR MATERIAL AS PER ITEM 304. THE MATERIAL SHALL EXTEND LATERALLY 36" BEYOND FACE OF CURB OR EDGE OF PAVEMENT. OTHER AREAS OUTSIDE ABOVE REQUIREMENT SHALL BE COMPACTED AS PER ITEM 611 (STORM SEWER), ITEM 638 (WATER MAIN).

STORAGE OF EQUIPMENT AND MATERIALS

NO MATERIALS OR EQUIPMENT SHALL BE STORED WITHIN THE RIGHT–OF–WAY OR WITHIN ONE HUNDRED (100) FEET OF ANY INTERSECTING STREET OR DRIVEWAY. COMPLIANCE WITH THESE REQUIREMENTS ALONG WITH ADDITIONAL PROVISIONS OF THE CONTRACT SPECIFICATIONS SHALL NOT IN ANY WAY RELIEVE THE CONTRACTOR OF HIS LEGAL RESPONSIBILITIES OR LIABILITIES FOR THE SAFETY OF THE PUBLIC. THE CONTRACTOR SHALL INDICATE HIS INTENT WITH REGARD TO STORAGE AT THE PRECONSTRUCTION MEETING.

SITE UTILITIES

CONTRACTOR SHALL BE RESPONSIBLE FOR COORDINATING THE ROUTING OF THE PROPOSED PRIVATE UTILITY SERVICES. THE ROUTING OF THE PROPOSED PRIVATE UTILITY SERVICES SHALL BE ADJUSTED IN THE FIELD AS NEEDED TO AVOID CONFLICTS WITH EXISTING UTILITIES AND EACH OTHER.

CONTRACTOR SHALL COORDINATE THE FINAL LOCATIONS OF THE PRIVATE UTILITY SERVICE CONNECTION POINTS AT THE BUILDING PERIMETER WITH THE MOST CURRENT APPROVED BUILDING MECHANICAL SYSTEM DRAWINGS. THE ROUTING OF THE PRIVATE UTILITY SERVICES SHALL BE FIELD ADJUSTED AS NEEDED TO MEET THE PROPOSED CONNECTION POINTS.

ROOF DRAINS

CONTRACTOR TO USE P.V.C. SEWER PIPE IN ACCORDANCE WITH ASTM D3034 AND WITH ODOT 720 WITH JOINTS PER ASTM D3212 FOR ROOF DRAIN PIPE. REFERENCE MECHANICAL, ELECTRICAL AND PLUMBING PLANS FOR SIZES OF ROOF DRAINS.

ALL PIPE FITTINGS FOR THE ROOF DRAINS ARE TO BE INCLUDED IN THE UNIT PRICE BID FOR ITEM SPEC. ROOF DRAINS, COMPLETE; UP TO 5' FROM THE BUILDING.

ALL BEDDING FOR ROOF DRAIN PIPE SHALL BE IN ACCORDANCE WITH ODOT 603.06 (TYPE 2 BEDDING).

ROOF DRAINS SHALL BE INSTALLED PER THE SLOPE DESIGNATED IN THE PLANS. IF SLOPE IS NOT DESIGNATED ON THE PLANS ROOF DRAINS SHALL BE INSTALLED AT A 1.00% MINIMUM SLOPE.

GRADING NOTES

ALL EROSION AND SEDIMENTATION CONTROL PRACTICES ARE SUBJECT TO FIELD MODIFICATIONS AT THE DISCRETION OF THE BUTLER COUNTY ENGINEER, PROJECT ENGINEER AND/OR THE OHIO EPA.

THE GENERAL CONTRACTOR IS RESPONSIBLE FOR PROVIDING EARTHWORK CALCULATIONS AND INCLUDING THE NECESSARY IMPORTING OR EXPORTING OF SOIL IN THE BASE BID.

ALL FILL PLACED FOR BUILDING PADS SHALL BE DONE SO IN ACCORDANCE WITH AND UNDER THE OBSERVATION OF A REGISTERED SOILS ENGINEER.

THE CONTRACTOR SHALL BE RESPONSIBLE TO EMPLOY THE SERVICES OF A REGISTERED SOILS ENGINEER TO INSURE THE SUBGRADE HAS BEEN COMPACTED IN ACCORDANCE WITH ODOT ITEM 203 AND THE RECOMMENDATIONS OF THE SOILS ENGINEER.

BACKFILL OF UTILITY TRENCHES SHALL CONFORM TO THE SPECIFICATIONS, AS DELINEATED ON THE SEWER PROFILES.

RESTORATION AND CLEAN UP

INCONVENIENCE TO THE ADJACENT PROPERTY OWNERS AND TO THE TRAVELING PUBLIC SHALL BE KEPT TO AN ABSOLUTE MINIMUM. ALL WORK IS TO CONTINUE ON A UNIFORM BASIS AND ON SCHEDULE, PARTICULARLY THE RESTORATION AND CLEAN UP OF DISTURBED AREAS AFTER CONSTRUCTION.

ALL FENCES, SIGNS, DRAINAGE STRUCTURES, VALVES, LANDSCAPING, ETC. REMOVED, DISTURBED OR DAMAGED DURING WORK WITHIN PUBLIC RIGHT–OF–WAYS, EASEMENT AREAS AND/OR UNDER THE PROJECT IMPROVEMENTS SHALL BE RESTORED TO THEIR ORIGINAL CONDITION BY THE CONTRACTOR UNLESS OTHERWISE SPECIFIED.

PAYMENT FOR SAME SHALL BE INCLUDED IN THE PRICE BID FOR SITE RESTORATION.

CONVENIENCE FACILITIES

THE CONTRACTOR SHALL FURNISH AND MAINTAIN SANITARY CONVENIENCE FACILITIES FOR THE WORKMEN AND INSPECTORS FOR THE DURATION OF THE WORK. COST SHALL BE INCLUDED IN THE PRICE BID MOBILIZATION.

NO.	DATE	BY	DESCRIPTION
1	10/13/2017	RJT	CONDITIONAL USE PERMIT
2	11/16/2017	RJT	REVISIONS PER TOWNSHIP & NEIGHBOR COMMENTS
3	12/15/2017	RJT	REVISED CONDITIONAL USE PERMIT SUBMITTAL

10200 ALLIANCE ROAD
SUITE 125
CINCINNATI, OH 45242-3222
TEL: 513.437.322
FAX: 888.468.7340

PROJECT DATE: 09/15/2017
PROJECT NO.: V1680001
DRAWN BY: DES
CHECKED BY: RJT

Mannik Smith GROUP
TECHNICAL SKILL. CREATIVE SPIRIT.
www.MannikSmithGroup.com

PREPARED FOR:
VCARVE CONSTRUCTIONS, LLC
1941 ALDA COURT
DAYTON, OH 45459

THE LOFTS AT INDIAN MEADOWS
MIXED-USE DEVELOPMENT
ROUTE 4 & INDIAN MEADOWS DRIVE
HAMILTON, OHIO 45011

GENERAL NOTES

C001

W:\Projects\Projects U-Z\V1680001\CAD\SITE PLANS\V1680001 - C001 - GENERAL NOTES.dwg - Last printed 12/14/2017 3:06 PM

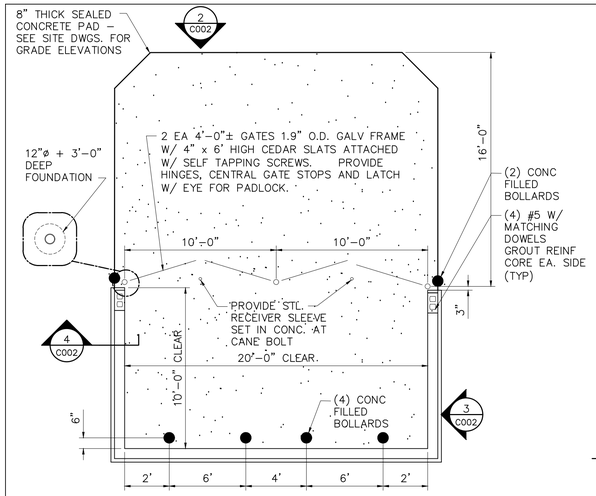

1 C002 ENCLOSURE PLAN
NOT TO SCALE

NOTE: SEE DRAWING C200 FOR LOCATION.

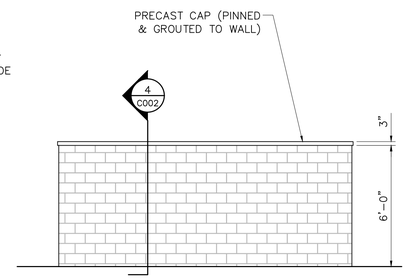

3 C002 DUMPSTER ELEVATION
NOT TO SCALE

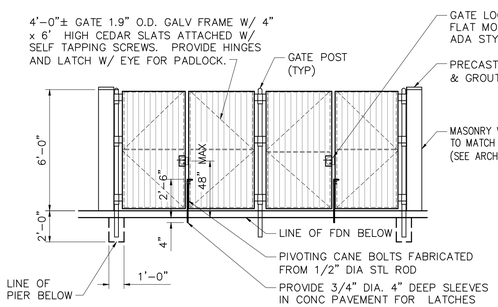

2 C002 ENCLOSURE ELEVATION
NOT TO SCALE

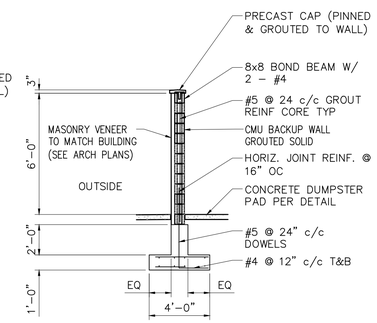

4 C002 ENCLOSURE SECTION
NOT TO SCALE

DUMPSTER ENCLOSURE DETAIL
NOT TO SCALE

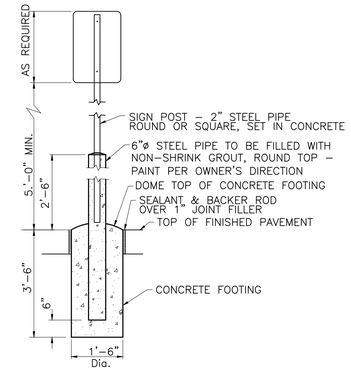

TYPICAL SIGN POST IN PAVEMENT
NOT TO SCALE

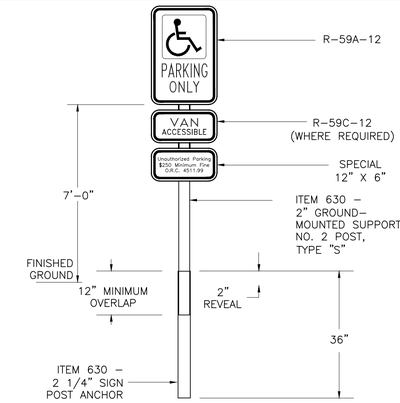

NOTE:
SIGNS PLACED IN PAVEMENT TO BE BOLLARD MOUNTED. ALL OTHER SIGNS TO BE STANDARD.

STANDARD HANDICAP PARKING SIGN
NOT TO SCALE

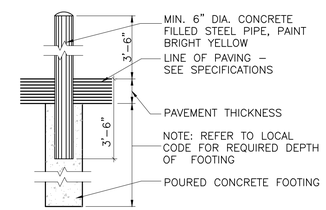

PIPE BOLLARD
NOT TO SCALE

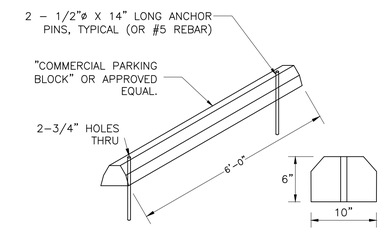

PARKING BLOCK DETAIL
NOT TO SCALE

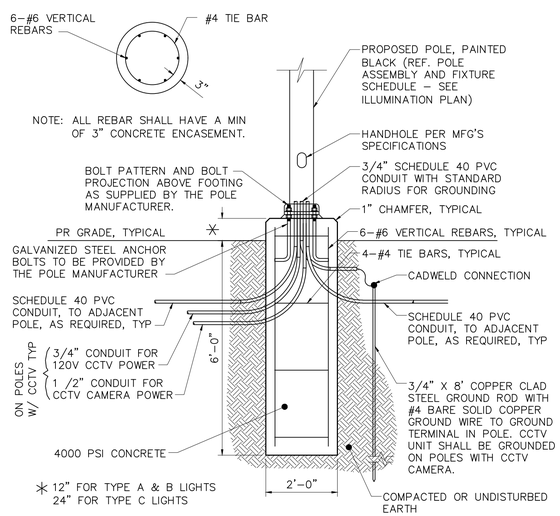

LIGHT POLE BASE DETAIL (TYP)
NOT TO SCALE

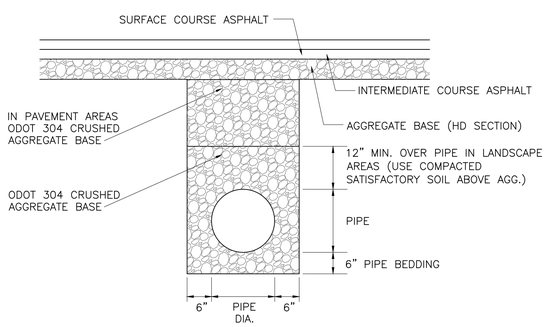

TRENCH BACKFILL DETAIL
NOT TO SCALE

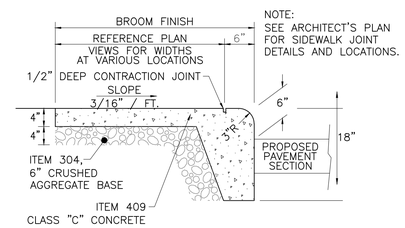

NOTE:
WALK TO BE DIVIDED INTO EQUALLY SPACED BLOCKS AT APPROXIMATELY 8' INTERVALS. EXPANSION JOINT FILLER 1/2" THICK SHALL BE INSTALLED BETWEEN WALK AND ANY FIXED STRUCTURE EXTENDING FOR THE FULL DEPTH OF THE SIDEWALK. THE EXPANSION JOINT FILLER SHALL BE 1" THICK WHERE WALK IS INSTALLED AGAINST BACK OF CURB.

COMBINED CURB AND WALK
NOT TO SCALE

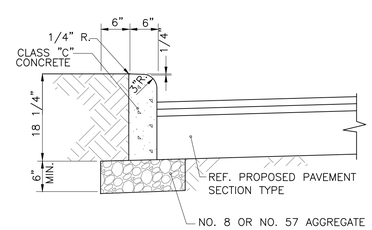

18" STRAIGHT CONCRETE CURB
NOT TO SCALE

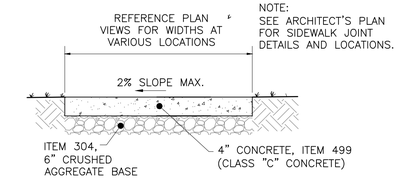

NOTE:
WALK TO BE DIVIDED INTO EQUALLY SPACED BLOCKS AT APPROXIMATELY 8' INTERVALS. EXPANSION JOINT FILLER 1/2" THICK SHALL BE INSTALLED BETWEEN WALK AND ANY FIXED STRUCTURE EXTENDING FOR THE FULL DEPTH OF THE SIDEWALK. THE EXPANSION JOINT FILLER SHALL BE 1" THICK WHERE WALK IS INSTALLED AGAINST BACK OF CURB.

TYPICAL SIDEWALK SECTION
NOT TO SCALE

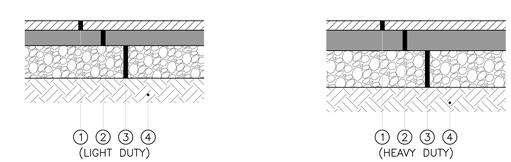

(LIGHT DUTY)
1. ITEM 448, 1.5" ASPHALT CONCRETE, SURFACE COURSE, TYPE 1
2. ITEM 448, 2.5" ASPHALT CONCRETE, INTERMEDIATE COURSE, TYPE 2
3. ITEM 304, 8" CRUSHED AGGREGATE BASE
4. SUBGRADE COMPACTION

(HEAVY DUTY)
1. ITEM 448, 1.5" ASPHALT CONCRETE, SURFACE COURSE, TYPE 1
2. ITEM 448, 3.5" ASPHALT CONCRETE, INTERMEDIATE COURSE, TYPE 2
3. ITEM 304, 10" CRUSHED AGGREGATE BASE
4. SUBGRADE COMPACTION

ALL PAVEMENT MATERIALS SHALL CONFORM TO THE STATE OF OHIO DEPARTMENT OF TRANSPORTATION CONSTRUCTION AND MATERIAL SPECIFICATIONS CURRENT EDITION.

PAVEMENT SECTIONS PROVIDED FOR REFERENCE ONLY AND REPRESENT MINIMUM RECOMMENDATIONS. CONTRACTOR SHALL VERIFY SECTION THICKNESS TO BE USED WITH OWNER. THE MANNIK & SMITH GROUP DOES NOT WARRANT PAVEMENT DESIGN.

PAVEMENT SECTIONS
NOT TO SCALE

NO.	DATE	BY	DESCRIPTION
1	10/13/2017	RJT	CONDITIONAL USE PERMIT
2	11/16/2017	RJT	REVISIONS PER TOWNSHIP & NEIGHBOR COMMENTS
3	12/15/2017	RJT	REVISED CONDITIONAL USE PERMIT SUBMITTAL

10200 ALLIANCE ROAD SUITE 125
CINCINNATI, OH 45242-3222
TEL: 513.437.322
FAX: 888.488.7340

PROJECT DATE: 09/15/2017
PROJECT NO.: V1680001
DRAWN BY: DES
CHECKED BY: RJT

Mannik Smith GROUP
TECHNICAL SKILL. CREATIVE SPIRIT.
www.MannikSmithGroup.com

PREPARED FOR:
VCARVE CONSTRUCTIONS, LLC
1941 ALDA COURT
DAYTON, OH 45459

THE LOFTS AT INDIAN MEADOWS
MIXED-USE DEVELOPMENT
ROUTE 4 & INDIAN MEADOWS DRIVE
HAMILTON, OHIO 45011

SITE DETAILS

C002

W:\Projects\Projects U-Z\V1680001\CAD\SITE PLANS\V1680001 - C002 - SITE DETAILS.dwg - Last printed 12/14/2017 3:06 PM

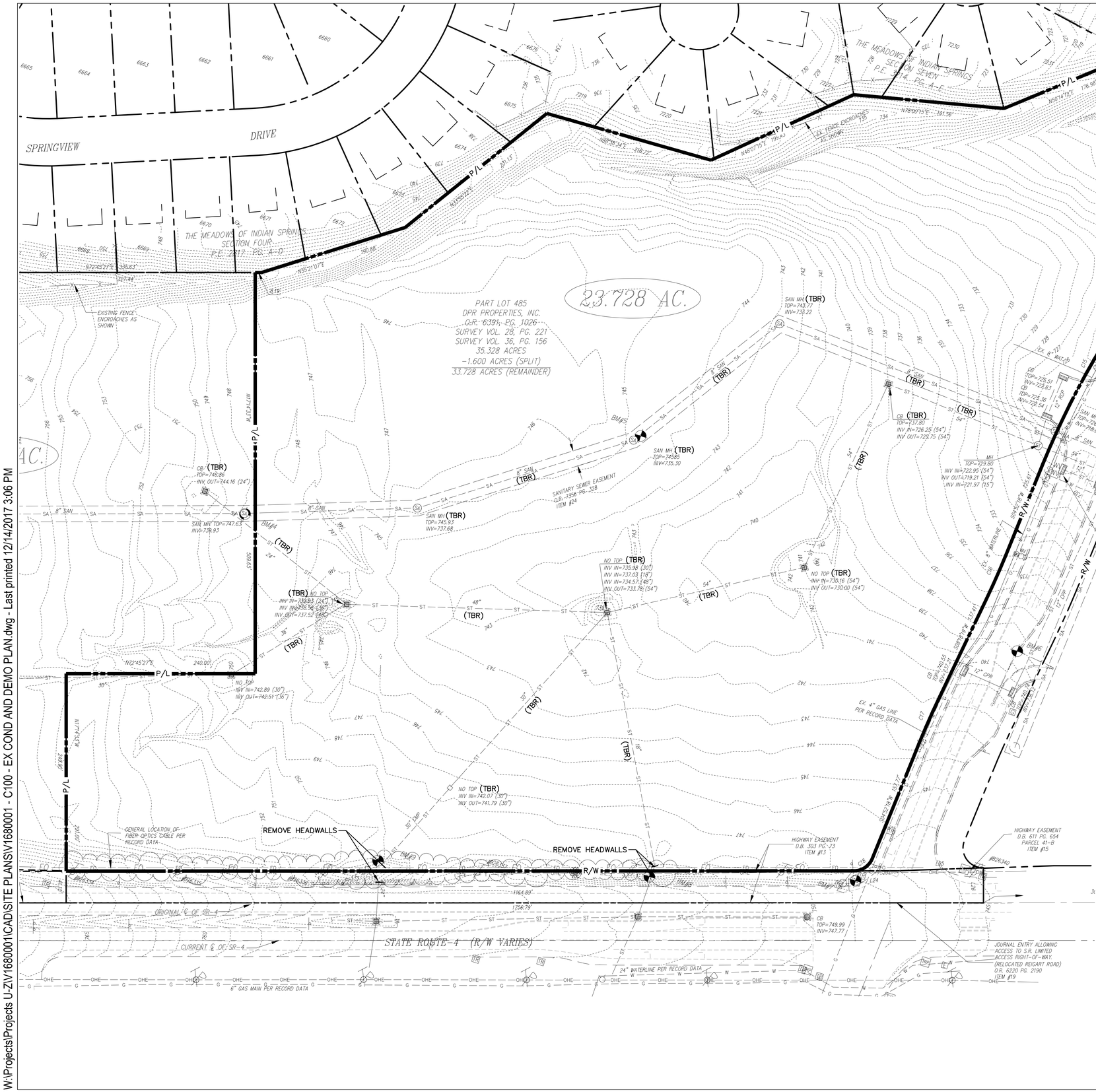

LEGEND

- EX STORM
- EX SANITARY
- EX OVERHEAD ELECTRIC
- EX WATER
- EX COMMUNICATIONS
- EX GAS
- EX FIBER OPTIC
- EX CATCH BASIE
- EX SANITARY MANHOLE
- WATER VALVE
- FIRE HYDRANT
- EX POWER POLE
- EX LIGHT POLE
- EX MAIL BOX
- EX SIGN
- PROPERTY LINE
- RIGHT OF WAY
- SOIL BORING

ABBREVIATIONS

P/L	PROPERTY LINE
TBR	TO BE REMOVED
EX	EXISTING
R/W	RIGHT OF WAY
C/L	CENTER LINE

OHIO Utilities Protection SERVICE
811 or 1-800-362-2764
Call Before You Dig

DEMOLITION NOTES

1. CONTRACTOR SHALL BE RESPONSIBLE FOR IDENTIFYING, CALCULATING & PRICING HIS OWN QUANTITIES.
2. CONTRACTOR TO VERIFY LOCATION AND ELEVATION OF EXISTING UTILITIES PRIOR TO STARTING DEMOLITION OF THE SITE. THE CONTRACTOR SHALL BE RESPONSIBLE FOR PROTECTION AND SUPPORT OF ALL EXISTING UTILITIES DURING CONSTRUCTION. CONTRACTOR SHALL GIVE NOTICE TO THE ENGINEER OF ANY CONFLICTS OR REQUIRED RELOCATIONS NOT SHOWN HEREON.
3. CONTRACTOR SHALL MINIMIZE DISRUPTION TO ADJOINING PROPERTIES AND SHALL COMPLETE WORK AS SOON AS PRACTICAL. CONTRACTOR SHALL COORDINATE THE PHASING OF THE PROJECT WITH THE CONSTRUCTION MANAGER AND ADJACENT OWNERS.
4. CONSTRUCTION DEBRIS GENERATED FROM DEMOLITION IS NOT CONSIDERED TO BE SUITABLE FOR USE IN ON-SITE FILLS, UNLESS THE DELETERIOUS MATERIALS CAN BE SORTED AND BROKEN DOWN SUFFICIENTLY TO MEET THE REQUIREMENTS OF THE GEOTECHNICAL ENGINEER.
5. CONTRACTOR SHALL EXERCISE EXTREME CAUTION WHEN CONDUCTING GRADING ACTIVITIES IN THE VICINITY OF THE EXISTING GAS, UNDERGROUND AND OVERHEAD ELECTRIC, FIBER OPTIC AND TELEPHONE LINES.
6. CONTRACTOR SHALL BE RESPONSIBLE FOR APPLYING FOR AND OBTAINING ALL PERMITS ASSOCIATED WITH THE SITE DEMOLITION AND MATERIAL DISPOSAL.
7. ARRANGE WITH THE OWNER A CONVENIENT TIME TO PERFORM DEMOLITION WORK AND INSTALL TEMPORARY PROTECTED MEANS OF EGRESS/INGRESS FROM REQUIRED EXITS, INCLUDING TEMPORARY LIGHTING AND SAFETY DEVICES, ALL IN ACCORDANCE WITH GOVERNING STATE AND LOCAL CODE AND LANDLORD REQUIREMENTS.
8. TRAFFIC: CONDUCT SITE CLEARING OPERATIONS TO ENSURE MINIMUM INTERFERENCE WITH ROADS, STREETS, WALKS, AND OTHER ADJACENT OCCUPIED OR USED FACILITIES. DO NOT CLOSE OR OBSTRUCT STREETS, WALKS OR OTHER OCCUPIED OR USED FACILITIES WITHOUT PERMISSION FROM AUTHORITIES HAVING JURISDICTION. CONTRACTOR SHALL MAINTAIN TWO WAY TRAFFIC ON < > AT ALL TIMES.
9. PROTECTION: PROVIDE TEMPORARY FENCES, BARRICADES, COVERINGS, OR OTHER PROTECTION TO PRESERVE EXISTING ITEMS INDICATED TO REMAIN AND TO PREVENT INJURY OR DAMAGE TO PERSONS OR PROPERTY. PROVIDE PROTECTION FOR ADJACENT PROPERTIES AS REQUIRED.
10. RESTORE INADVERTENT SITE DAMAGE TO CONDITION EXISTING PRIOR TO START OF WORK.
11. STRIP AND STOCKPILE TOPSOIL THAT IS FREE OF CLAY, LARGE STONES AND DEBRIS, FOR REUSE IN GRASSED AND PLANTED AREAS.
12. REMOVE EXISTING IMPROVEMENTS, BOTH ABOVE-GRADE AND BELOW-GRADE TO EXTENT INDICATED OR AS OTHERWISE REQUIRED TO PERMIT NEW CONSTRUCTION AS FOLLOWS:
    A. REMOVE COMPLETELY ALL EXISTING WALLS, FLOORS, FOOTINGS, PIERS, SLABS, AND OTHER OBSTRUCTIONS WITHIN THE GROUND AREA TO BE OCCUPIED BY NEW BUILDINGS, UTILITY LINES OR EQUIPMENT FOR A DISTANCE OF 5' BEYOND PERIMETER OF NEW BUILDINGS OR WALLS.
    B. EXISTING WELLS, CISTERNS OR CATCH BASINS NOT TO BE REUSED, THAT ARE WITHIN 5' OF THE NEW BUILDING WALLS, SHALL BE CLEANED OUT TO SOLID SUB-GRADE, THEN FILLED WITH SAND TO UNDERSIDE OF NEW FOOTING OR FLOOR SLAB. EXISTING BASEMENT FLOORS, CISTERNS OR CESSPOOLS, OUTSIDE OF BUILDING AREA, IF OF MASONRY OR CONCRETE AND TO BE LEFT IN PLACE, SHALL BE CLEANED OF ALL DEBRIS AND BOTTOMS BROKEN UP TO PROVIDE DRAINAGE BEFORE ANY FILL IS PLACED OVER THEM. ALL STORM SEWER PIPES AT ABANDONED CATCH BASINS SHALL BE BULKHEADED PER THE CITY OF < > SPECIFICATIONS.
    C. IN AREAS TO BE SURFACED OR PLANTED, REMOVE ALL EXISTING WALLS, CURBS, PAVING AND OTHER OBSTRUCTIONS TO DEPTH OF 24" BELOW FINISHED GRADE.
14. SALVAGEABLE ITEMS: CAREFULLY REMOVE ITEMS INDICATED TO BE SALVAGED (IF ANY), AND STORE ON OWNER'S PREMISES WHERE INDICATED OR DIRECTED.
15. CONTROL AIR POLLUTION CAUSED BY DUST AND DIRT; COMPLY WITH GOVERNING REGULATIONS.
16. FILL DEPRESSIONS AND VOIDS RESULTING FROM SITE CLEARING OPERATIONS, USING SATISFACTORY SOIL MATERIALS, PLACED IN MAXIMUM 6 INCH LIFTS. COMPACT EACH LIFT TO DENSITY OF SURROUNDING ORIGINAL GROUND. GRADE BACKFILLED SURFACE TO CONFORM TO PROPOSED SITE CONTOURS AND TO PROVIDE POSITIVE DRAINAGE.
17. DISPOSE OF WASTE MATERIALS, INCLUDING TRASH AND DEBRIS, AND EXCESS TOPSOIL, OFF OWNER'S PROPERTY IN A LAWFUL MANNER.
18. BURNING OF WASTE MATERIALS ON SITE IS NOT PERMITTED.
19. EXISTING UTILITY CONNECTIONS AND TAPS THAT ARE NOT TO BE REUSED ARE TO BE ABANDONED IN ACCORDANCE WITH THE REQUIREMENTS OF THE RESPECTIVE SUPPLIER.

NO.	DATE	BY	DESCRIPTION
1	10/13/2017	RJT	CONDITIONAL USE PERMIT
2	11/16/2017	RJT	REVISIONS PER TOWNSHIP & NEIGHBOR COMMENTS
3	12/15/2017	RJT	REVISED CONDITIONAL USE PERMIT SUBMITTAL

10200 ALLIANCE ROAD
SUITE 195
CINCINNATI, OH 45242-3222
TEL: 513.437.322
FAX: 888.468.7340

PROJECT DATE: 09/15/2017
PROJECT NO.: V16680001
DRAWN BY: DES
CHECKED BY: RJT

Mannik Smith GROUP
TECHNICAL SKILL. CREATIVE SPIRIT.
www.MannikSmithGroup.com

PREPARED FOR:
VCARVE CONSTRUCTIONS, LLC
1941 ALDA COURT
DAYTON, OH 45459

THE LOFTS AT INDIAN MEADOWS MIXED-USE DEVELOPMENT

ROUTE 4 & INDIAN MEADOWS DRIVE
HAMILTON, OHIO 45011

EXISTING CONDITION AND DEMO PLAN

C100

W:\Projects\Projects U-Z\V16680001\CAD\SITE PLANS\V16680001 - C100 - EX COND AND DEMO PLAN.dwg - Last printed 12/14/2017 3:06 PM

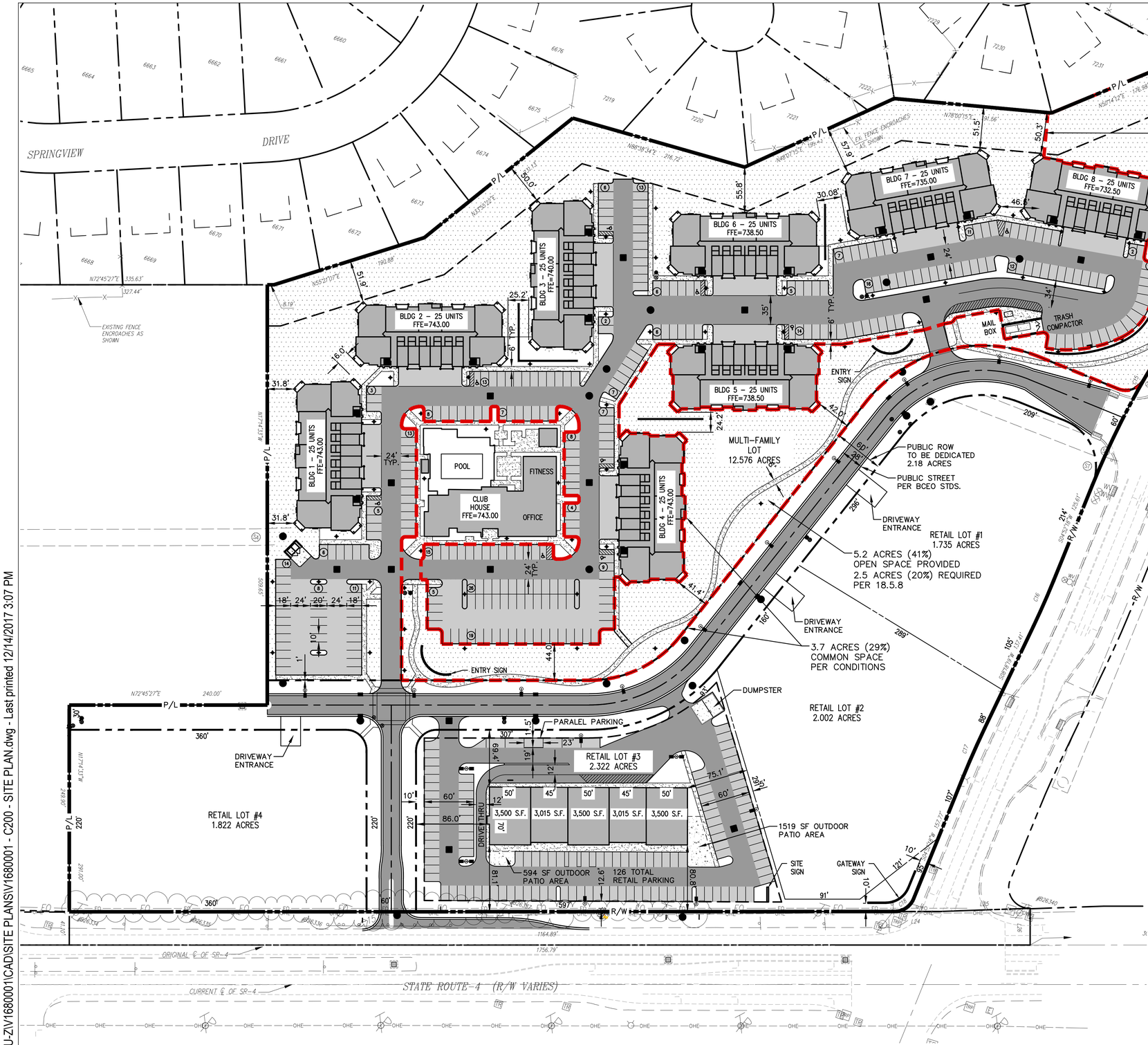

SCALE: 1 IN = 60 FT

LEGEND

- EX CATCH BASIN
- EX SANITARY MANHOLE
- EX WATER VALVE
- EX FIRE HYDRANT
- EX POWER POLE
- EX LIGHT POLE
- EX MAIL BOX
- EX SIGN
- PR FLAG POLE
- PR LIGHT POLE
- PR LIGHT POLE
- PR PAVEMENT
- PR CURB
- P/L PROPERTY LINE
- R/W RIGHT OF WAY
- PARKING COUNT
- CONCRETE PAVEMENT
- LIMITS OF HEAVY DUTY PAVEMENT
- LIMITS OF LIGHT DUTY PAVEMENT
- CONCRETE SIDEWALK

ABBREVIATIONS

P/L PROPERTY LINE
PR PROPOSED
R/W RIGHT OF WAY
C/L CENTER LINE
FFE FINISH FLOOR ELEVATION

SITE PLAN NOTES

1. ALL DIMENSIONS ARE TO EDGE OF PAVEMENT, UNLESS OTHERWISE NOTED.
2. ALL PAVEMENT MARKINGS, SIGNS AND OTHER TRAFFIC CONTROL DEVICES SHALL CONFORM TO AASHTO AND THE MANUAL ON UNIFORM TRAFFIC CONTROL DEVICES.
3. CONTRACTOR SHALL FURNISH AND INSTALL ALL PAVEMENT MARKINGS AS SHOWN ON THE PLANS. PAVEMENT MARKINGS SHALL BE APPLIED PER MANUFACTURER RECOMMENDATIONS. APPLY PAINT TO CLEAN, DRY SURFACES TO YIELD SHARP DEFINITION OF EDGES. AIR TEMPERATURE OF 50° MINIMUM. APPLY TWO (2) COATS.
4. PAVEMENT MARKINGS FOR PUBLIC ROADS SHALL BE IN ACCORDANCE WITH ODOT CONSTRUCTION MATERIALS SPECIFICATIONS AND SHALL BE EITHER COLD LAID PLASTIC TAPE OR PAINTED THERMO PLASTIC AS DESIGNATED ON THE PLANS.
5. ALL PAVEMENT RADII ARE 5' UNLESS NOTED OTHERWISE ON PLAN.

NOTES

ZONING IS B3 – GENERAL BUSINESS

MULTI-FAMILY SITE SUMMARY

SITE AREA: 12.576 ACRES
TOTAL RESIDENTIAL UNITS: 200
DENSITY: 15.9 UNITS/ACRE

OPEN SPACE: 5.2 ACRES
DENSITY: 41% OPEN SPACE
REQUIRED: 20% OPEN SPACE

COMMON OPEN SPACE 3.7 ACRES
DENSITY: 29% COMMON OPEN SPACE

STANDARD PARKING SPACES: 297
STD. HANDICAP SPACES: 7
VAN HANDICAP SPACES: 2
GARAGE SPACES: 48
STD. SPACES IN FRONT OF GARAGE: 48
TOTAL PARKING SPACES: 402
PARKING DENSITY: 2.01 SPACES/UNIT

NO.	DATE	BY	DESCRIPTION
1	10/13/2017	RJT	CONDITIONAL USE PERMIT
2	11/16/2017	RJT	REVISIONS PER TOWNSHIP & NEIGHBOR COMMENTS
3	12/15/2017	RJT	REVISED CONDITIONAL USE PERMIT SUBMITTAL

10200 ALLIANCE ROAD
SUITE 125
CINCINNATI, OH 45242-3222
TEL: 513.437.322
FAX: 888.468.7340

PROJECT DATE: 09/15/2017
PROJECT NO.: V16800001
DRAWN BY: DES
CHECKED BY: RJT

Mannik Smith GROUP
TECHNICAL SKILL. CREATIVE SPIRIT.
www.MannikSmithGroup.com

PREPARED FOR:
VCARVE CONSTRUCTIONS, LLC
1941 ALDA COURT
DAYTON, OH 45459

THE LOFTS AT INDIAN MEADOWS
MIXED-USE DEVELOPMENT
ROUTE 4 & INDIAN MEADOWS DRIVE
HAMILTON, OHIO 45011

SITE PLAN

C200

W:\Projects\Projects U-Z\V16800001\CAD\SITE PLANS\V16800001 - C200 - SITE PLAN.dwg - Last printed 12/14/2017 3:07 PM

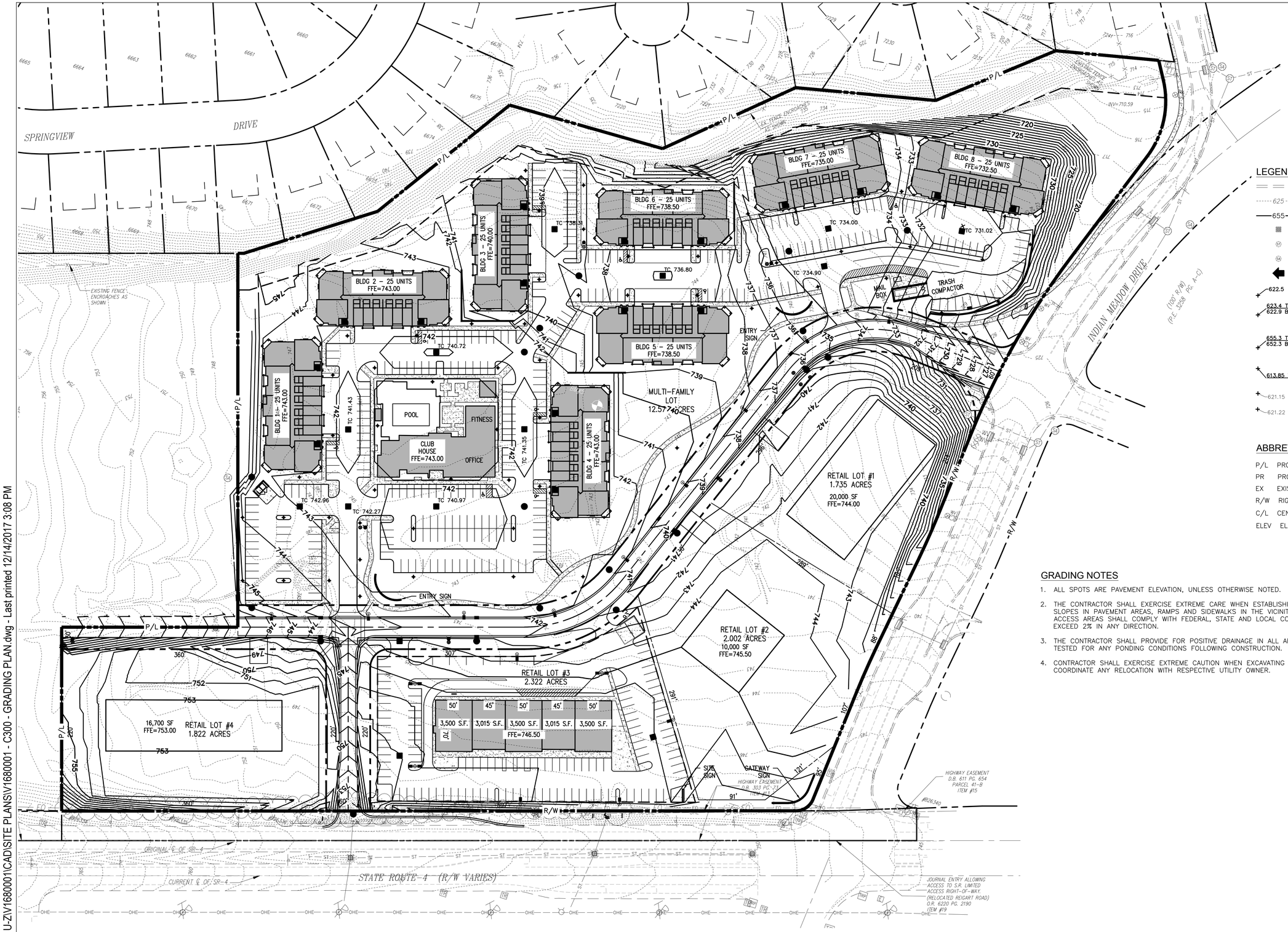

0 30 60 120
SCALE: 1 IN = 60 FT

LEGEND

- EX CURB & PAVEMENT
- 625 EX CONTOUR
- 655 PR CONTOUR
- EX CATCH BASIN
- EX STORM MANHOLE
- EX SANITARY MANHOLE
- PR FLOOD ROUTING
- 622.5 PR SPOT GRADE
- 623.4 TOC / 622.9 BOC — TOP ELEV (TOP OF CURB) BOTTOM ELEV (BOTTOM OF CURB)
- 655.3 TW / 652.3 BW — TOP ELEV (TOP OF WALL) BOTTOM ELEV (BOTTOM OF WALL)
- 613.85 TVC — TOP OF CASTING ELEV
- 621.15 EX SPOT GRADE
- 621.22 M/E EX SPOT GRADE, PR MEET EXISTING

ABBREVIATIONS

P/L PROPERTY LINE
PR PROPOSED
EX EXISTING
R/W RIGHT OF WAY
C/L CENTER LINE
ELEV ELEVATION

GRADING NOTES

1. ALL SPOTS ARE PAVEMENT ELEVATION, UNLESS OTHERWISE NOTED.
2. THE CONTRACTOR SHALL EXERCISE EXTREME CARE WHEN ESTABLISHING ALL GRADES AND SLOPES IN PAVEMENT AREAS, RAMPS AND SIDEWALKS IN THE VICINITY OF HANDICAP PARKING. ACCESS AREAS SHALL COMPLY WITH FEDERAL, STATE AND LOCAL CODES. SLOPES NOT TO EXCEED 2% IN ANY DIRECTION.
3. THE CONTRACTOR SHALL PROVIDE FOR POSITIVE DRAINAGE IN ALL AREAS. PAVEMENT SHALL BE TESTED FOR ANY PONDING CONDITIONS FOLLOWING CONSTRUCTION.
4. CONTRACTOR SHALL EXERCISE EXTREME CAUTION WHEN EXCAVATING AROUND EXISTING UTILITIES. COORDINATE ANY RELOCATION WITH RESPECTIVE UTILITY OWNER.

NO.	DATE	BY	DESCRIPTION
1	10/13/2017	RJT	CONDITIONAL USE PERMIT
2	11/16/2017	RJT	REVISIONS PER TOWNSHIP & NEIGHBOR COMMENTS
3	12/15/2017	RJT	REVISED CONDITIONAL USE PERMIT SUBMITTAL

10200 ALLIANCE ROAD
SUITE 125
CINCINNATI, OH 45242-3222
TEL: 513.437.322
FAX: 888.468.7340

PROJECT DATE: 09/15/2017
PROJECT NO.: V1680001
DRAWN BY: DES
CHECKED BY: RJT

Mannik Smith GROUP
TECHNICAL SKILL. CREATIVE SPIRIT.
www.MannikSmithGroup.com

PREPARED FOR:
VCARVE CONSTRUCTIONS, LLC
1941 ALDA COURT
DAYTON, OH 45459

THE LOFTS AT INDIAN MEADOWS
MIXED-USE DEVELOPMENT
ROUTE 4 & INDIAN MEADOWS DRIVE
HAMILTON, OHIO 45011

GRADING PLAN

C300

W:\Projects\Projects U-Z\V1680001\CAD\SITE PLANS\V1680001 - C300 - GRADING PLAN.dwg - Last printed 12/14/2017 3:08 PM

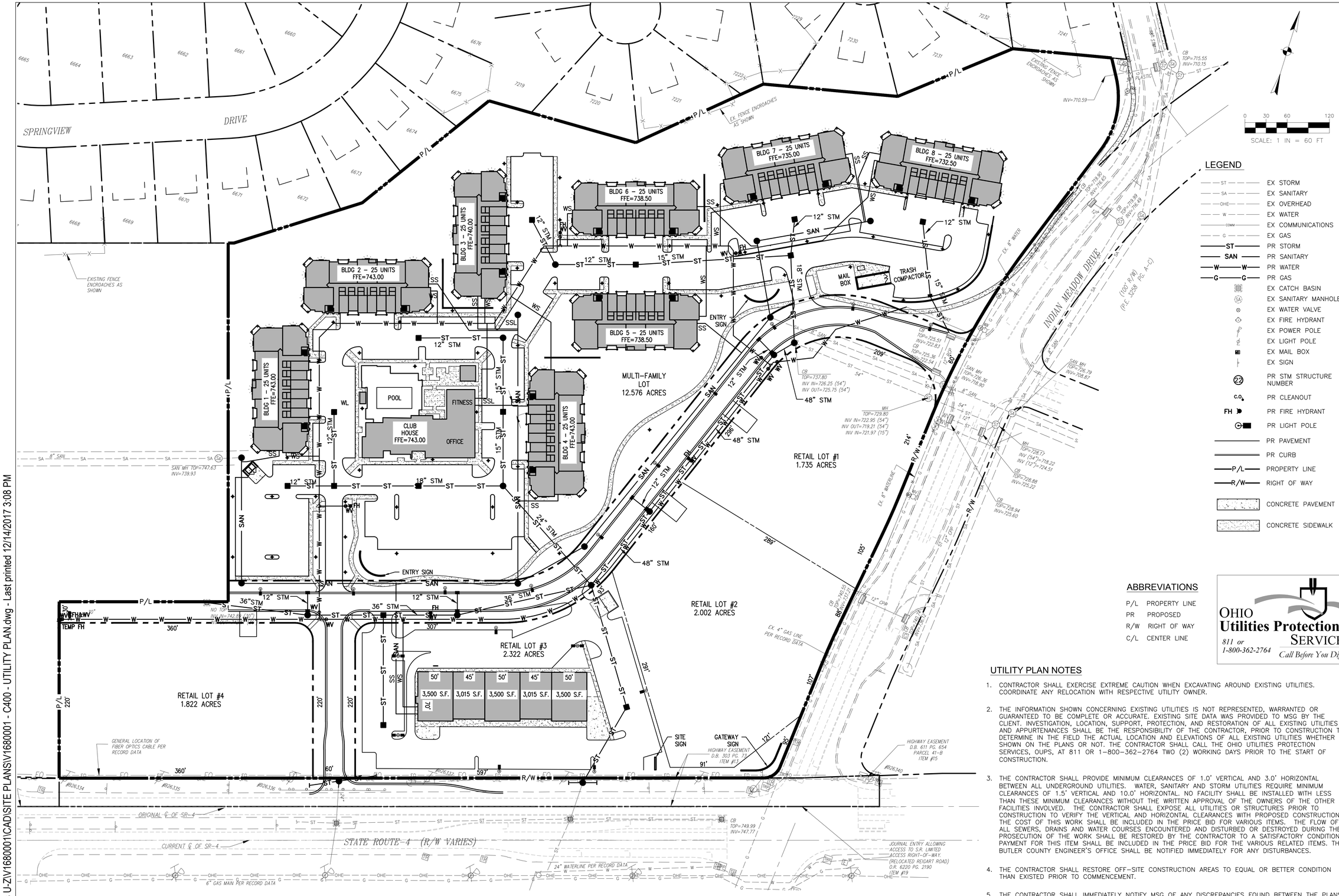

LEGEND

- EX STORM
- EX SANITARY
- EX OVERHEAD
- EX WATER
- EX COMMUNICATIONS
- EX GAS
- PR STORM
- PR SANITARY
- PR WATER
- PR GAS
- EX CATCH BASIN
- EX SANITARY MANHOLE
- EX WATER VALVE
- EX FIRE HYDRANT
- EX POWER POLE
- EX LIGHT POLE
- EX MAIL BOX
- EX SIGN
- PR STM STRUCTURE NUMBER
- PR CLEANOUT
- PR FIRE HYDRANT
- PR LIGHT POLE
- PR PAVEMENT
- PR CURB
- PROPERTY LINE
- RIGHT OF WAY
- CONCRETE PAVEMENT
- CONCRETE SIDEWALK

ABBREVIATIONS

P/L	PROPERTY LINE
PR	PROPOSED
R/W	RIGHT OF WAY
C/L	CENTER LINE

OHIO Utilities Protection SERVICE
811 or 1-800-362-2764
Call Before You Dig

UTILITY PLAN NOTES

1. CONTRACTOR SHALL EXERCISE EXTREME CAUTION WHEN EXCAVATING AROUND EXISTING UTILITIES. COORDINATE ANY RELOCATION WITH RESPECTIVE UTILITY OWNER.
2. THE INFORMATION SHOWN CONCERNING EXISTING UTILITIES IS NOT REPRESENTED, WARRANTED OR GUARANTEED TO BE COMPLETE OR ACCURATE. EXISTING SITE DATA WAS PROVIDED TO MSG BY THE CLIENT. INVESTIGATION, LOCATION, SUPPORT, PROTECTION, AND RESTORATION OF ALL EXISTING UTILITIES AND APPURTENANCES SHALL BE THE RESPONSIBILITY OF THE CONTRACTOR, PRIOR TO CONSTRUCTION TO DETERMINE IN THE FIELD THE ACTUAL LOCATION AND ELEVATIONS OF ALL EXISTING UTILITIES WHETHER SHOWN ON THE PLANS OR NOT. THE CONTRACTOR SHALL CALL THE OHIO UTILITIES PROTECTION SERVICES, OUPS, AT 811 OR 1–800–362–2764 TWO (2) WORKING DAYS PRIOR TO THE START OF CONSTRUCTION.
3. THE CONTRACTOR SHALL PROVIDE MINIMUM CLEARANCES OF 1.0' VERTICAL AND 3.0' HORIZONTAL BETWEEN ALL UNDERGROUND UTILITIES. WATER, SANITARY AND STORM UTILITIES REQUIRE MINIMUM CLEARANCES OF 1.5' VERTICAL AND 10.0' HORIZONTAL. NO FACILITY SHALL BE INSTALLED WITH LESS THAN THESE MINIMUM CLEARANCES WITHOUT THE WRITTEN APPROVAL OF THE OWNERS OF THE OTHER FACILITIES INVOLVED. THE CONTRACTOR SHALL EXPOSE ALL UTILITIES OR STRUCTURES PRIOR TO CONSTRUCTION TO VERIFY THE VERTICAL AND HORIZONTAL CLEARANCES WITH PROPOSED CONSTRUCTION. THE COST OF THIS WORK SHALL BE INCLUDED IN THE PRICE BID FOR VARIOUS ITEMS. THE FLOW OF ALL SEWERS, DRAINS AND WATER COURSES ENCOUNTERED AND DISTURBED OR DESTROYED DURING THE PROSECUTION OF THE WORK SHALL BE RESTORED BY THE CONTRACTOR TO A SATISFACTORY CONDITION. PAYMENT FOR THIS ITEM SHALL BE INCLUDED IN THE PRICE BID FOR THE VARIOUS RELATED ITEMS. THE BUTLER COUNTY ENGINEER'S OFFICE SHALL BE NOTIFIED IMMEDIATELY FOR ANY DISTURBANCES.
4. THE CONTRACTOR SHALL RESTORE OFF–SITE CONSTRUCTION AREAS TO EQUAL OR BETTER CONDITION THAN EXISTED PRIOR TO COMMENCEMENT.
5. THE CONTRACTOR SHALL IMMEDIATELY NOTIFY MSG OF ANY DISCREPANCIES FOUND BETWEEN THE PLANS OR FIELD CONDITIONS PRIOR TO START OF CONSTRUCTION.
6. ALL STORM PIPE TO BE ADS N–12 OR RCP CLASS IV INSTALLED PER OHIO DEPARTMENT OF TRANSPORTATION (ODOT) SPECIFICATIONS. DOWNSPOUT LINES TO PVC SDR35.
7. PROPOSED WATER AND SANITARY UTILITY SERVICE CONNECTIONS SHALL BE BORED WITHIN THE PUBLIC RIGHT OF WAY. A PERMIT FROM THE BUTLER COUNTY ENGINEER'S OFFICE IS REQUIRED FOR WORK WITHIN THE PUBLIC RIGHT OF WAY.

NO.	DATE	BY	DESCRIPTION
1	10/13/2017	RJT	CONDITIONAL USE PERMIT
2	11/16/2017	RJT	REVISIONS PER TOWNSHIP & NEIGHBOR COMMENTS
3	12/15/2017	RJT	REVISED CONDITIONAL USE PERMIT SUBMITTAL

11020 ALLIANCE ROAD
SUITE 105
CINCINNATI, OH 45242-3222
TEL: 513.437.322
FAX: 888.468.7340

PROJECT DATE: 09/15/2017
PROJECT NO.: V1680001
DRAWN BY: DES
CHECKED BY: RJT

Mannik Smith GROUP
TECHNICAL SKILL. CREATIVE SPIRIT.
www.MannikSmithGroup.com

PREPARED FOR:
VCARVE CONSTRUCTIONS, LLC
1941 ALDA COURT
DAYTON, OH 45459

THE LOFTS AT INDIAN MEADOWS
MIXED-USE DEVELOPMENT
ROUTE 4 & INDIAN MEADOWS DRIVE
HAMILTON, OHIO 45011

UTILITY PLAN

C400

W:\Projects\Projects U-Z\V1680001\CAD\SITE PLANS\V1680001 - C400 - UTILITY PLAN.dwg - Last printed 12/14/2017 3:08 PM

W:\Projects\Projects U-Z\V1680001\CAD\SITE PLANS\V1680001 - C500 - ILLUMINATION PLAN.dwg - Last printed 12/14/2017 3:08 PM

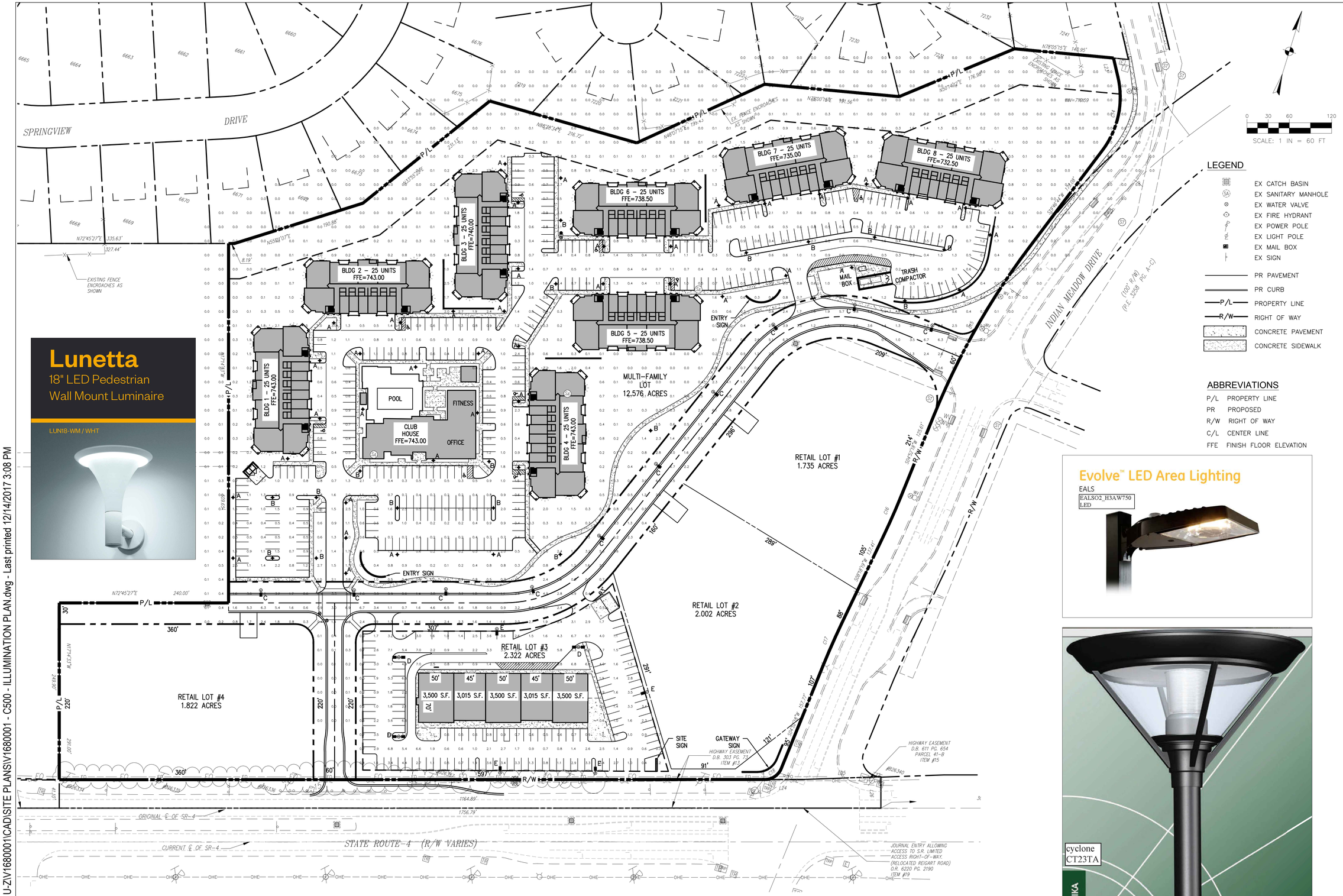

LEGEND

- EX CATCH BASIN
- EX SANITARY MANHOLE
- EX WATER VALVE
- EX FIRE HYDRANT
- EX POWER POLE
- EX LIGHT POLE
- EX MAIL BOX
- EX SIGN
- PR PAVEMENT
- PR CURB
- P/L PROPERTY LINE
- R/W RIGHT OF WAY
- CONCRETE PAVEMENT
- CONCRETE SIDEWALK

ABBREVIATIONS

P/L	PROPERTY LINE
PR	PROPOSED
R/W	RIGHT OF WAY
C/L	CENTER LINE
FFE	FINISH FLOOR ELEVATION

LUMINAIRE SCHEDULE							
SYMBOL	QTY	LABEL	ARRANGEMENT	LLF	DESCRIPTION	LUM. WATTS	LUM. LUMENS
	42	A	SINGLE	0.900	CT23TA–TGAO–SKY–3M–68W–4K 16' POLE 1' BASE	79	5987
	17	B	SINGLE	0.900	CT23TA–TGAO–SKY–5–68W–4K 16' POLE, 1' BASE	79	6099
	10	C	SINGLE	0.900	EALSO2_H3AW750 23' POLE, 2' BASE	171	21600
	3	D	D–180	0.900	EALSO2_S5SW750 23' POLE, 2' BASE	171	21600
	4	E	SINGLE	0.900	EALSO2_H4AF750 23' POLE, 2' BASE	171	20000
	47	F	SINGLE	0.900	LUN18–40K–WHT	45.5	2807

ILLUMINATION PLAN NOTES

1. PREPARED BY:
   LIGHTING CONCEPTS & CONTROLS INC.
   9753 CRESCENT PARK DR
   WEST CHESTER, OHIO 45069
   PHONE: (513)761–6360
   ON 11/16/2017.
2. SEE SHEET C002 FOR LIGHT POLE DETAIL.

NO.	DATE	BY	DESCRIPTION
1	10/13/2017	RJT	CONDITIONAL USE PERMIT
2	11/16/2017	RJT	REVISIONS PER TOWNSHIP & NEIGHBOR COMMENTS
3	12/15/2017	RJT	REVISED CONDITIONAL USE PERMIT SUBMITTAL

10200 ALLIANCE ROAD
SUITE 200
CINCINNATI, OH 45242-3222
TEL: 513.437.322
FAX: 888.468.7340

PROJECT DATE: 09/15/2017
PROJECT NO.: V1680001
DRAWN BY: DES
CHECKED BY: RJT

Mannik Smith GROUP
TECHNICAL SKILL. CREATIVE SPIRIT.
www.MannikSmithGroup.com

PREPARED FOR:
VCARVE CONSTRUCTIONS, LLC
1941 ALDA COURT
DAYTON, OH 45459

THE LOFTS AT INDIAN MEADOWS
MIXED-USE DEVELOPMENT
ROUTE 4 & INDIAN MEADOWS DRIVE
HAMILTON, OHIO 45011

ILLUMINATION PLAN

C500

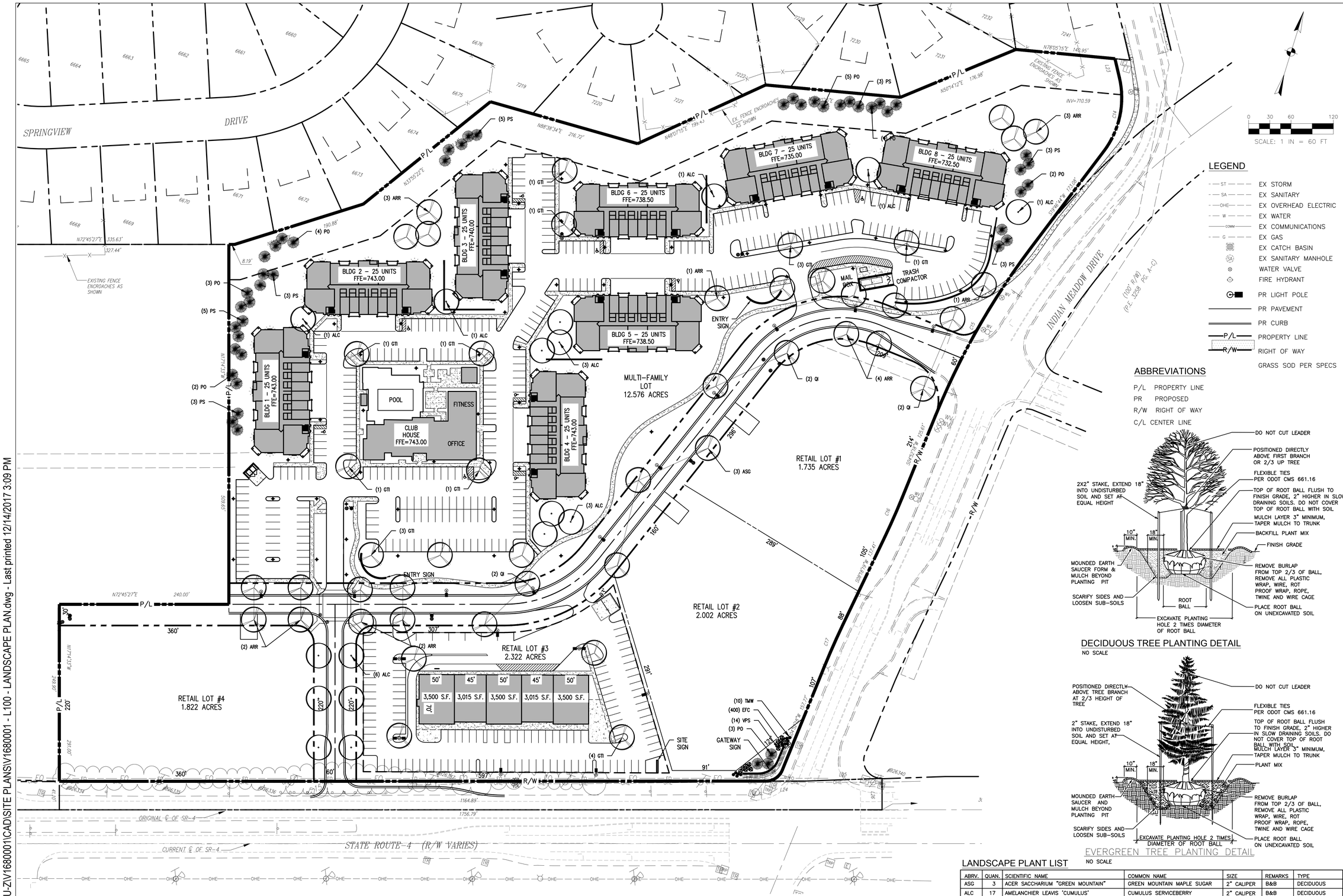

LEGEND

- EX STORM
- EX SANITARY
- EX OVERHEAD ELECTRIC
- EX WATER
- EX COMMUNICATIONS
- EX GAS
- EX CATCH BASIN
- EX SANITARY MANHOLE
- WATER VALVE
- FIRE HYDRANT
- PR LIGHT POLE
- PR PAVEMENT
- PR CURB
- PROPERTY LINE
- RIGHT OF WAY
- GRASS SOD PER SPECS

ABBREVIATIONS

P/L PROPERTY LINE
PR PROPOSED
R/W RIGHT OF WAY
C/L CENTER LINE

DECIDUOUS TREE PLANTING DETAIL

NO SCALE

EVERGREEN TREE PLANTING DETAIL

NO SCALE

LANDSCAPE PLANT LIST

ABRV.	QUAN.	SCIENTIFIC NAME	COMMON NAME	SIZE	REMARKS	TYPE
ASG	3	ACER SACCHARIUM "GREEN MOUNTAIN"	GREEN MOUNTAIN MAPLE SUGAR	2" CALIPER	B&B	DECIDUOUS
ALC	17	AMELANCHIER LEAVIS 'CUMULUS'	CUMULUS SERVICEBERRY	2" CALIPER	B&B	DECIDUOUS
ARR	20	ACER RUBRUM 'RED SUNSET	RED SUNSET MAPLE	2" CALIPER	B&B	DECIDUOUS
GTI	17	GLEDITSIA TRI. INERMIS 'IMPERIAL'	IMPERIAL HONEY LOCUST	2" CALIPER	B&B	DECIDUOUS
QI	6	QUERGUS IMBRICARIA	SHINGLE OAK	2" CALIPER	B&B	DECIDUOUS
PO	23	PICEA OMORIKA	SERBIAN SPRUCE	5' HEIGHT	B&B	EVERGREEN
PS	25	PINUS STROBUS	EASTERN WHITE PINE	5' HEIGHT	B&B	EVERGREEN
EFC	400	EUONYMUS FORTUNEII 'COLORATUS'	PURPLE WINTERCREEPER	2" PEAT POT	CONTAINER	GROUND COVER
VPS	14	VIBURNUM PLICATUM TOM. "SHASTA'	SHASTA DOUBLEFILE VIBURNUM	3' HEIGHT	B&B	DEC. SHRUB
TMW	10	TAXUS MEDIA 'WARDI'	WARDII YEW	24" SPREAD	B&B	EVG. SHRUB

NO.	DATE	BY	DESCRIPTION
1	10/13/2017	RJT	CONDITIONAL USE PERMIT
2	11/16/2017	RJT	REVISIONS PER TOWNSHIP & NEIGHBOR COMMENTS
3	12/15/2017	RJT	REVISED CONDITIONAL USE PERMIT SUBMITTAL

10200 ALLIANCE ROAD
SUITE 125
CINCINNATI, OH 45242-3222
TEL: 513.437.322
FAX: 888.468.7340

PROJECT DATE: 09/15/2017
PROJECT NO.: V1680001
DRAWN BY: DES
CHECKED BY: RJT

Mannik Smith GROUP
TECHNICAL SKILL. CREATIVE SPIRIT.
www.MannikSmithGroup.com

PREPARED FOR:
VCARVE CONSTRUCTIONS, LLC
1941 ALDA COURT
DAYTON, OH 45459

THE LOFTS AT INDIAN MEADOWS
MIXED-USE DEVELOPMENT
ROUTE 4 & INDIAN MEADOWS DRIVE
HAMILTON, OHIO 45011

LANSCAPE PLAN

L100

W:\Projects\Projects U-Z\V1680001\CAD\SITE PLANS\V1680001 - L100 - LANDSCAPE PLAN.dwg - Last printed 12/14/2017 3:09 PM

REAR ELEVATION 1/8" = 1'-0"

ELEVATION KEY NOTES

1. 4" BRICK VENEER
2. 4" LIMESTONE VENEER 12" x 24"
3. 4" HIGH LIMESTONE SILL
4. 8" HIGH LIMESTONE SILL BAND
5. 8" HIGH LIMESTONE HEADER
6. EIFS W/ WEEP SYSTEM
7. EIFS TRIM
8. EIFS CORNICE
9. EIFS RECESSED PANELS
10. FYPON BRACKETS
11. COMPOSITE FASCIA & SOFFIT
12. ALUMINUM CAP
13. EPDM MEMBRANE ROOF
14. 18" HIGH FLAT ROOF ENTRANCE CANOPY W/ ARCHITECTURAL ALUMINUM PANELS ON FACE AND SOFFIT
15. ALUMINUM LOUVER AWNINGS
16. 42" HIGH ALUMINUM RAILINGS
17. PRESSURE TREATED WOOD PATIO DECK W/ COMPOSITE DECKING
18. COMPOSITE TRIM ON FACE OF PATIO DECK
19. COMMERCIAL STOREFRONT ENTRY DOORS WITH BRUSHED ALUMINUM PULLS
20. COMMERCIAL STOREFRONT GLAZING - LOW E INSULATED GLASS
21. 3'-0 x 6'-0 DOUBLE HUNG WINDOWS
22. 8'-0 x 8'-0 SLIDING GLASS PATIO DOORS
23. 9'-0 WIDE x 8'-0 HIGH GARAGE DOORS ON OPENERS - MODERN URBAN LOOK
24. 8" LIMESTONE GARAGE DOOR HEADER
25. PAINTED EXPOSED I-BEAM PATIO DECK COLUMNS & BEAMS TO SUPPORT WOOD DECK
26. 20" DIA. x 3'-0" HIGH ROUND POURED CONCRETE COLUMN PIERS
27. METAL DOWN SPOUT & SCUPPER

RIGHT & LEFT ELEVATIONS 1/8" = 1'-0"

FRONT ELEVATION 1/8" = 1'-0"

The Lofts at Indian Meadows

MIXED-USE DEVELOPMENT
FAIRFIELD TOWNSHIP, OH

Rte. 4 & Indian Meadows Dr.
Hamilton, OH 45011

BUILDER / DEVELOPER:

VCARVE
CONSTRUCTIONS, LLC

Sam Echuri

1941 Alda Court
Dayton, OH 45459

937.546.5687

ARCHITREND
JIM BAUMAN DESIGN

ARCHITECTURE | DESIGN
977 W. Main Street | Tipp City, OH 45371

www.Architrend.des

jim@architrend.design 937.609.1

STRUCTURE
937.694.4605

© Copyright 2016 Architrend L

#	DATE	RELEASE / REVISION
	10/17/17	PROPOSED CONCEPT

The Lofts at
Indian Meadows

Apartment Buildings 1 - 8

ELEVATIONS

C-1710

PD3

WEST ELEVATION 1/8" = 1'-0"

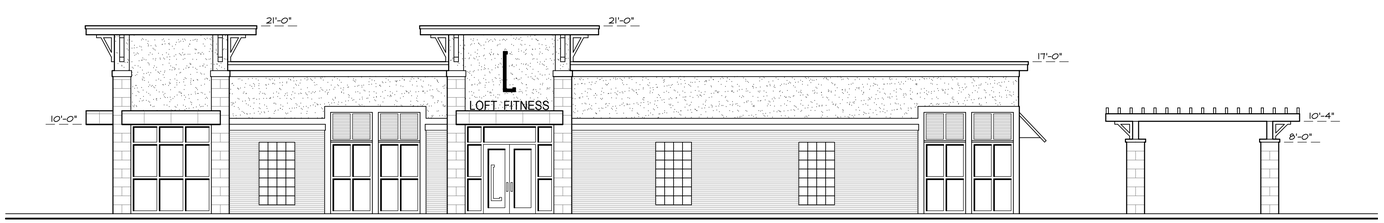

EAST ELEVATION 1/8" = 1'-0"

ELEVATION KEY NOTES

1. 4" BRICK VENEER
2. 4" LIMESTONE VENEER 12" x 24"
3. 4" HIGH LIMESTONE SILL
4. 8" HIGH LIMESTONE SILL BAND
5. 8" HIGH LIMESTONE HEADER
6. EIFS W/ WEEP SYSTEM
7. EIFS TRIM
8. EIFS CORNICE
9. EIFS RECESSED PANELS
10. FYPON BRACKETS
11. COMPOSITE FASCIA & SOFFIT
12. ALUMINUM CAP
13. EPDM MEMBRANE ROOF
14. 18" HIGH FLAT ROOF ENTRANCE CANOPY W/ ARCHITECTURAL ALUMINUM PANELS ON FACE AND SOFFIT
15. ALUMINUM LOUVER AWNINGS
16. 42" HIGH ALUMINUM RAILINGS
17. COMMERCIAL STOREFRONT ENTRY DOORS WITH BRUSHED ALUMINUM PULLS
18. COMMERCIAL STOREFRONT GLAZING - LOW E INSULATED GLASS

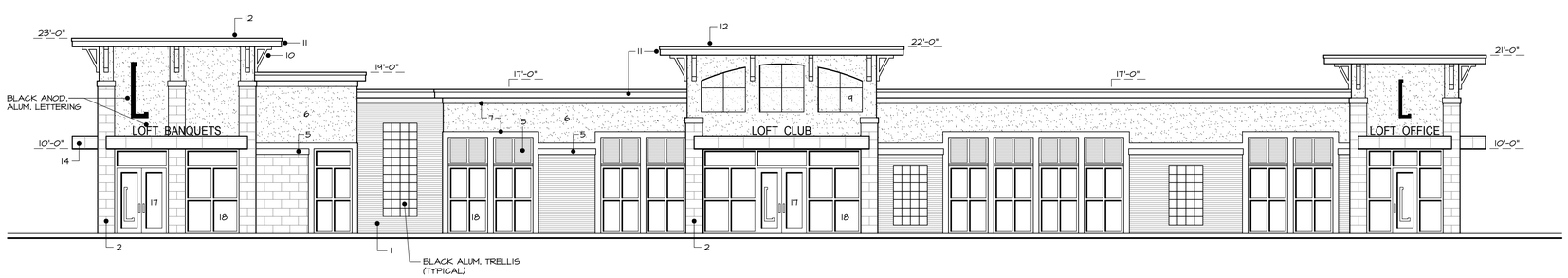

SOUTH ELEVATION 1/8" = 1'-0"

The Lofts at Indian Meadows

MIXED-USE DEVELOPMENT
FAIRFIELD TOWNSHIP, OH

Rte. 4 & Indian Meadows Dr.
Hamilton, OH 45011

BUILDER / DEVELOPER:

VCARVE
CONSTRUCTIONS, LLC

Sam Echuri

1941 Alda Court
Dayton, OH 45459

937.546.5687

ARCHITREND
JIM BAUMAN DESIGN

ARCHITECTURE | DESIGN
977 W. Main Street | Tipp City, OH 45371
www.Architrend.des
jim@architrend.design 937.609.1

© Copyright 2016 Architrend L

STRUCTURB
937.694.4605

#	DATE	RELEASE / REVISION
	10/24/17	PROPOSED CONCEPT

The Lofts at
Indian Meadows

The Clubhouse

CLUBHOUSE ELEVATIONS

C-1710

PD2

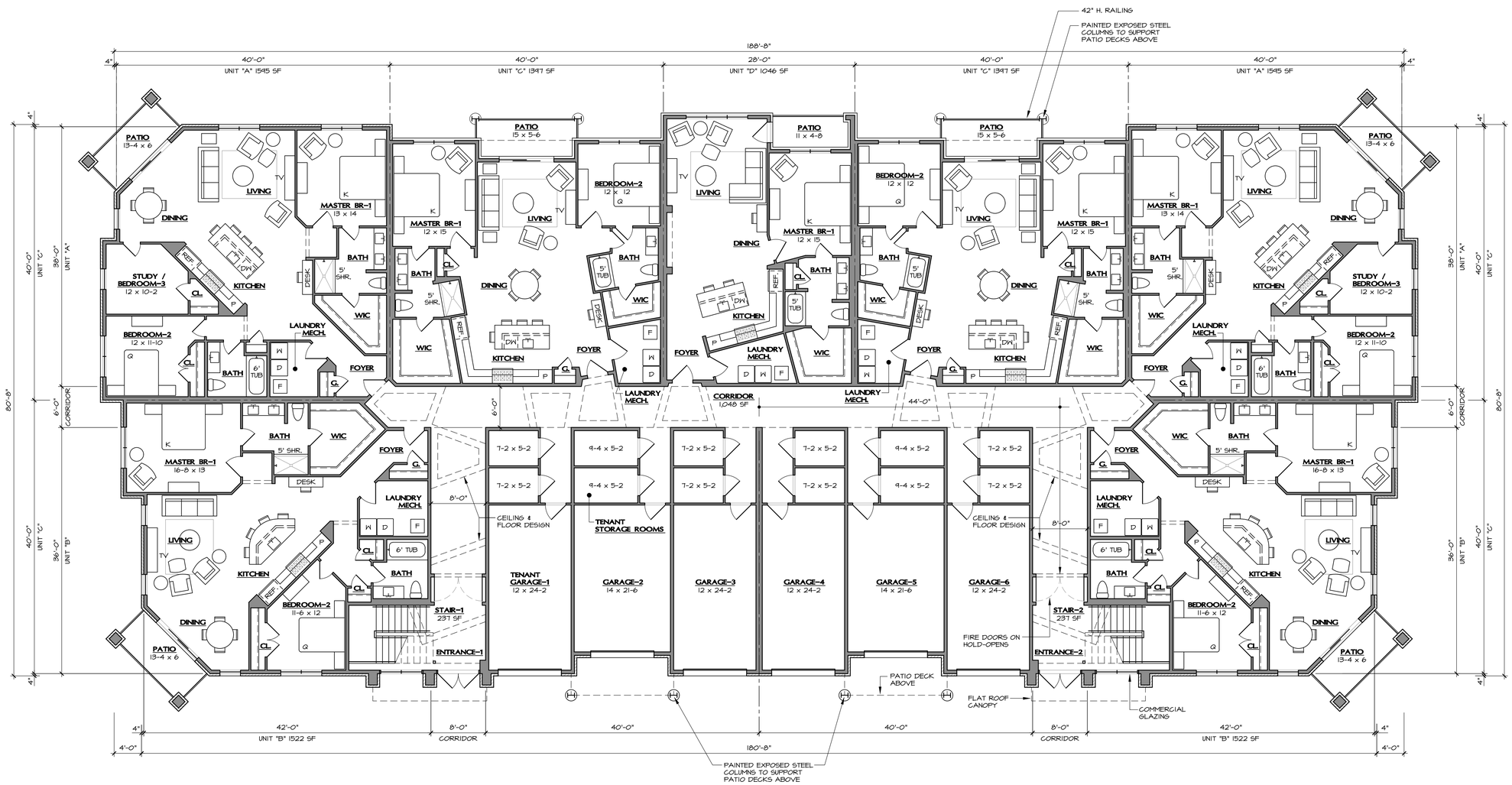

FIRST FLOOR PLAN 1/8" = 1'-0"		UNIT SF	TOTAL SF	
2 EA.	UNIT "A" 2-BEDROOM CORNER UNIT W/ STUDY / BR-3	1,545	3,190	
2 EA.	UNIT "B" 2-BEDROOM CORNER UNIT	1,522	3,044	
2 EA.	UNIT "C" 2-BEDROOM UNIT	1,347	2,794	
1 EA.	UNIT "D" 1-BEDROOM UNIT	1,044	1,044	
7 EA.	TOTAL UNITS FIRST FLOOR (LIVING AREA)		10,072	
	CORRIDORS / STAIRS 1 & 2 / GARAGES 1 - 6 / STORAGE RM's. 1 - 12		4,314	
	TOTAL BUILDING AREA FIRST FLOOR		14,386	x 3 = 43,158 TOTAL 3 FLOORS

The Lofts at Indian Meadows

MIXED-USE DEVELOPMENT
FAIRFIELD TOWNSHIP, OH

Rte. 4 & Indian Meadows Dr.
Hamilton, OH 45011

BUILDER / DEVELOPER:

VCARVE
CONSTRUCTIONS, LLC

Sam Echuri

1941 Alda Court
Dayton, OH 45459

937.546.5687

ARCHITREND
JIM BAUMAN DESIGN

ARCHITECTURE | DESIGN
977 W. Main Street | Tipp City, OH 45371

www.Architrend.des

jim@architrend.design 937.609.1

© Copyright 2016 Architrend L

STRUCTURE
937.694.4605

#	DATE	RELEASE / REVISION
	10/17/17	PROPOSED CONCEPT

The Lofts at
Indian Meadows

Apartment Buildings 1 - 8

FIRST FLOOR
INTERIORS PLAN

C-1710

PD1

WEST ELEVATION 1/8" = 1'-0"

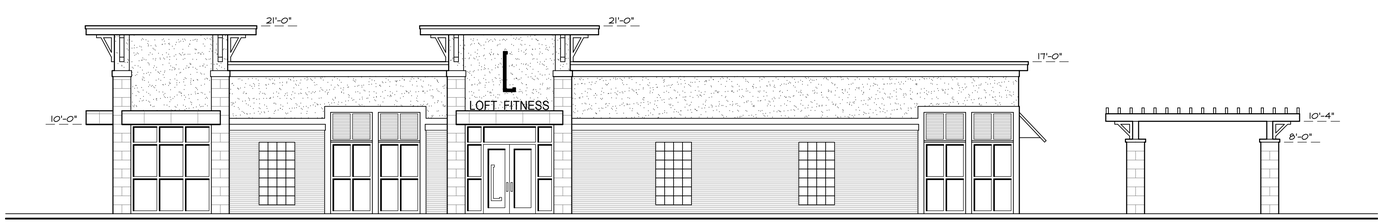

EAST ELEVATION 1/8" = 1'-0"

ELEVATION KEY NOTES

1. 4" BRICK VENEER
2. 4" LIMESTONE VENEER 12" x 24"
3. 4" HIGH LIMESTONE SILL
4. 8" HIGH LIMESTONE SILL BAND
5. 8" HIGH LIMESTONE HEADER
6. EIFS W/ WEEP SYSTEM
7. EIFS TRIM
8. EIFS CORNICE
9. EIFS RECESSED PANELS
10. FYPON BRACKETS
11. COMPOSITE FASCIA & SOFFIT
12. ALUMINUM CAP
13. EPDM MEMBRANE ROOF
14. 18" HIGH FLAT ROOF ENTRANCE CANOPY W/ ARCHITECTURAL ALUMINUM PANELS ON FACE AND SOFFIT
15. ALUMINUM LOUVER AWNINGS
16. 42" HIGH ALUMINUM RAILINGS
17. COMMERCIAL STOREFRONT ENTRY DOORS WITH BRUSHED ALUMINUM PULLS
18. COMMERCIAL STOREFRONT GLAZING - LOW E INSULATED GLASS

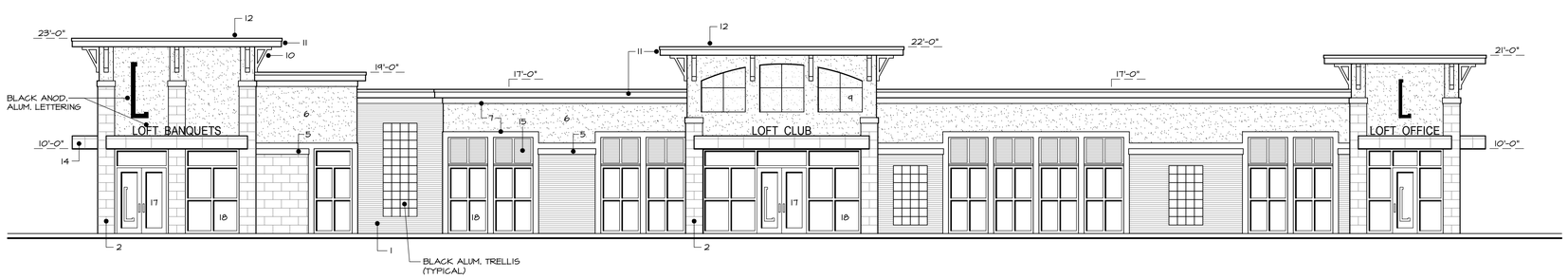

SOUTH ELEVATION 1/8" = 1'-0"

The Lofts at Indian Meadows

MIXED-USE DEVELOPMENT
FAIRFIELD TOWNSHIP, OH

Rte. 4 & Indian Meadows Dr.
Hamilton, OH 45011

BUILDER / DEVELOPER:

VCARVE
CONSTRUCTIONS, LLC

Sam Echuri

1941 Alda Court
Dayton, OH 45459

937.546.5687

ARCHITREND
JIM BAUMAN DESIGN

ARCHITECTURE | DESIGN
977 W. Main Street | Tipp City, OH 45371
www.Architrend.des
jim@architrend.design 937.609.1

© Copyright 2016 Architrend L

STRUCTURB
937.694.4605

#	DATE	RELEASE / REVISION
	10/24/17	PROPOSED CONCEPT

The Lofts at
Indian Meadows

The Clubhouse

CLUBHOUSE ELEVATIONS

C-1710

PD2

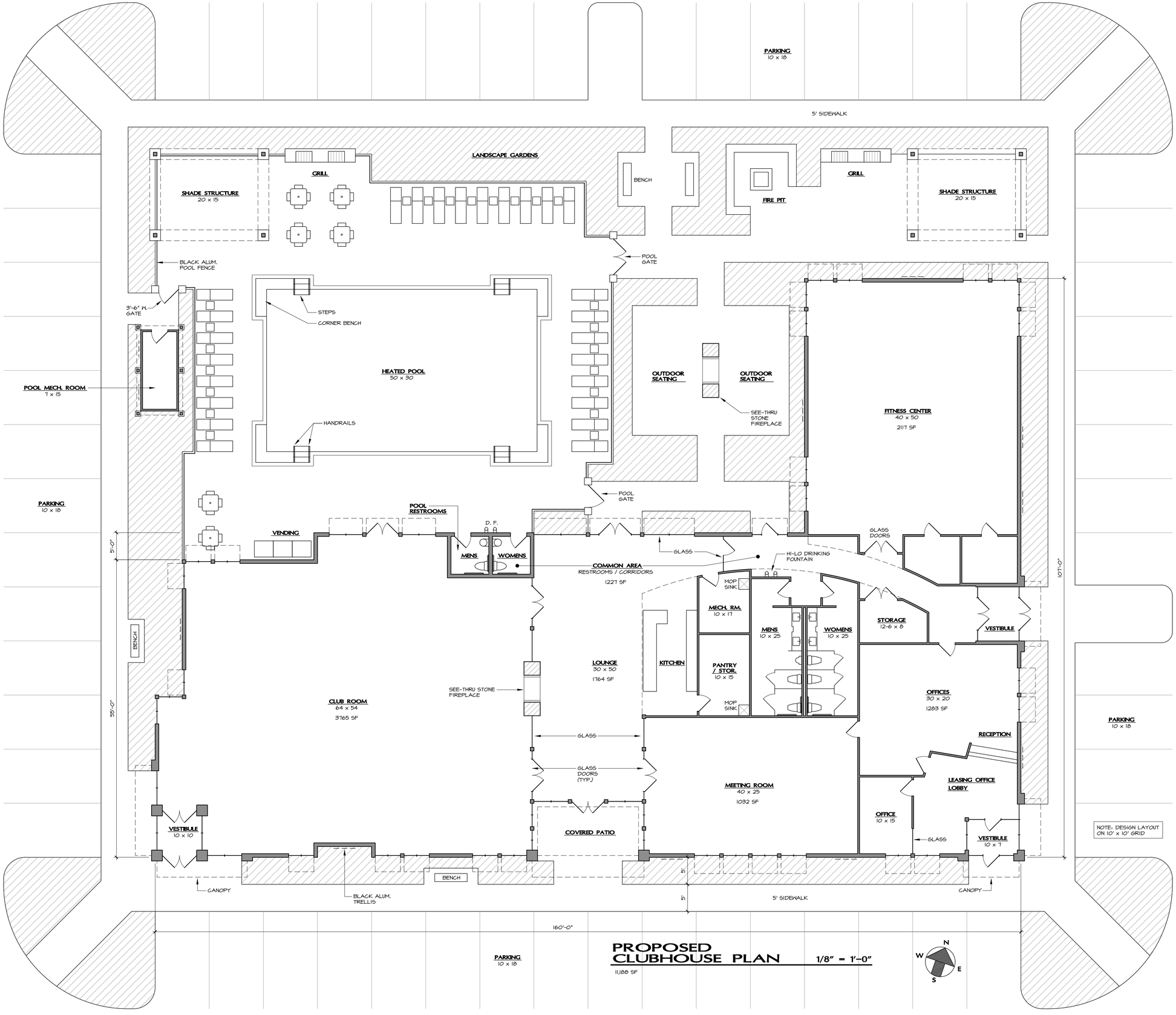

PROPOSED CLUBHOUSE PLAN

1/8" = 1'-0"

11,188 SF

The Lofts at Indian Meadows

MIXED-USE DEVELOPMENT
FAIRFIELD TOWNSHIP, OH

Rte. 4 & Indian Meadows Dr.
Hamilton, OH 45011

BUILDER / DEVELOPER:

VCARVE CONSTRUCTIONS, LLC

Sam Echuri

1941 Alda Court
Dayton, OH 45459

937.546.5687

ARCHITREND
JIM BAUMAN DESIGN

ARCHITECTURE | DESIGN
977 W. Main Street | Tipp City, OH 45371

www.Architrend.design
jim@architrend.design 937.609.1962

© Copyright 2016 Architrend LLC

STRUCTURE
937.694.4605

#	DATE	RELEASE / REVISION
	10/24/17	PROPOSED CONCEPT

The Lofts at Indian Meadows

The Clubhouse

CLUBHOUSE FLOOR PLAN

C-1710

PD1

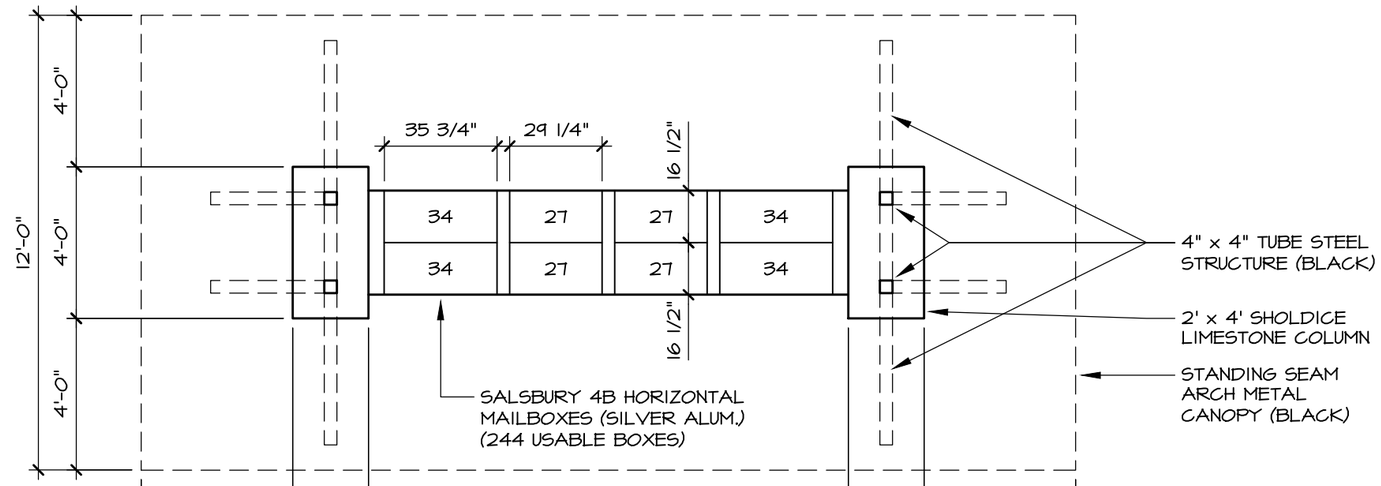

PLAN VIEW

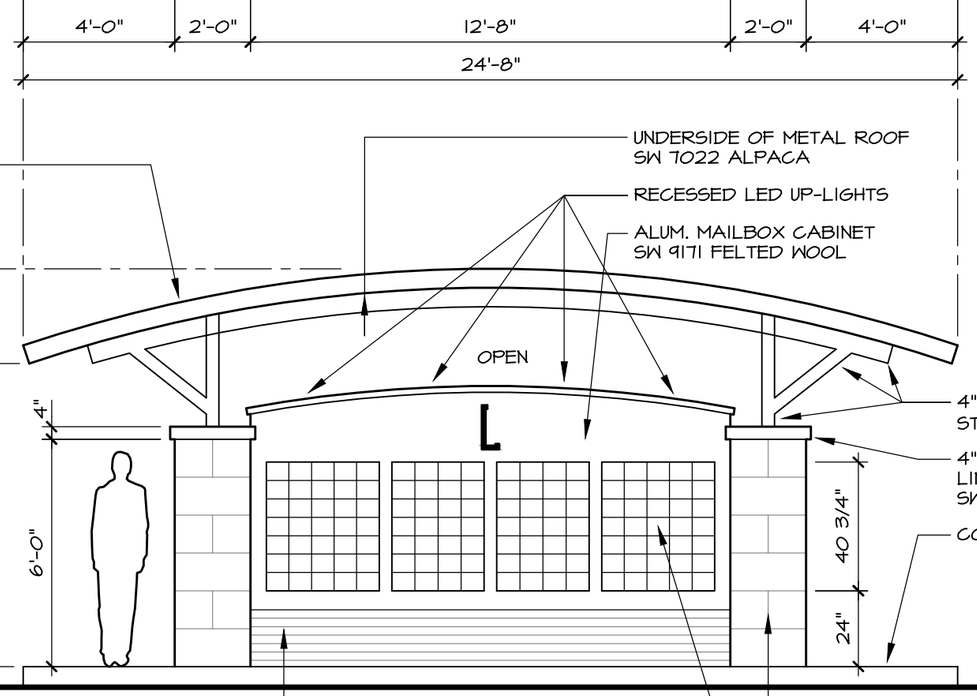

FRONT & REAR ELEVATION

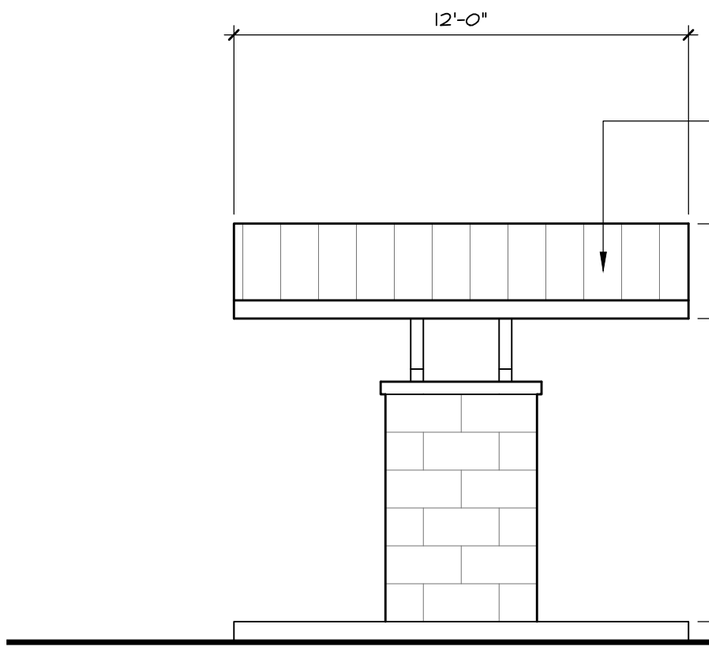

SIDE ELEVATION

MAILBOX CANOPY 1/4" = 1'-0"

THE LOFTS AT INDIAN MEADOWS – MAILBOX CANOPY PLAN

VCARVE CONSTRUCTIONS

ARCHITREND 10 / 24 / 17

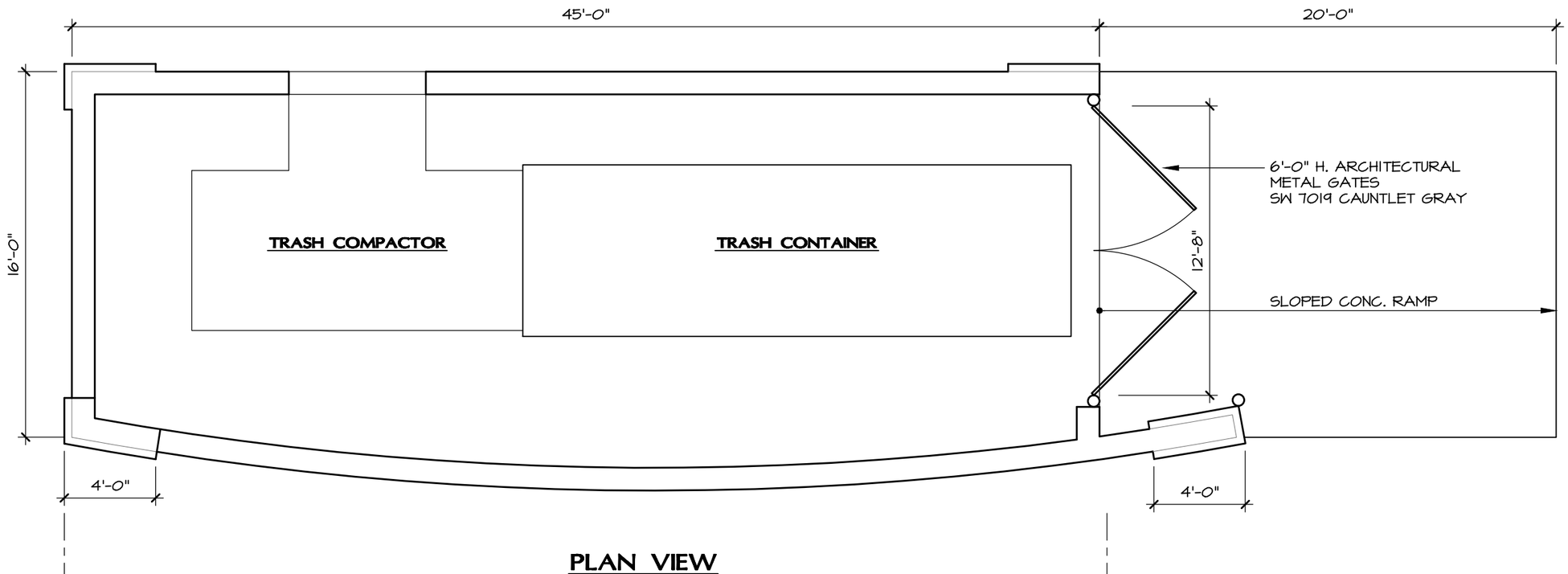

PLAN VIEW

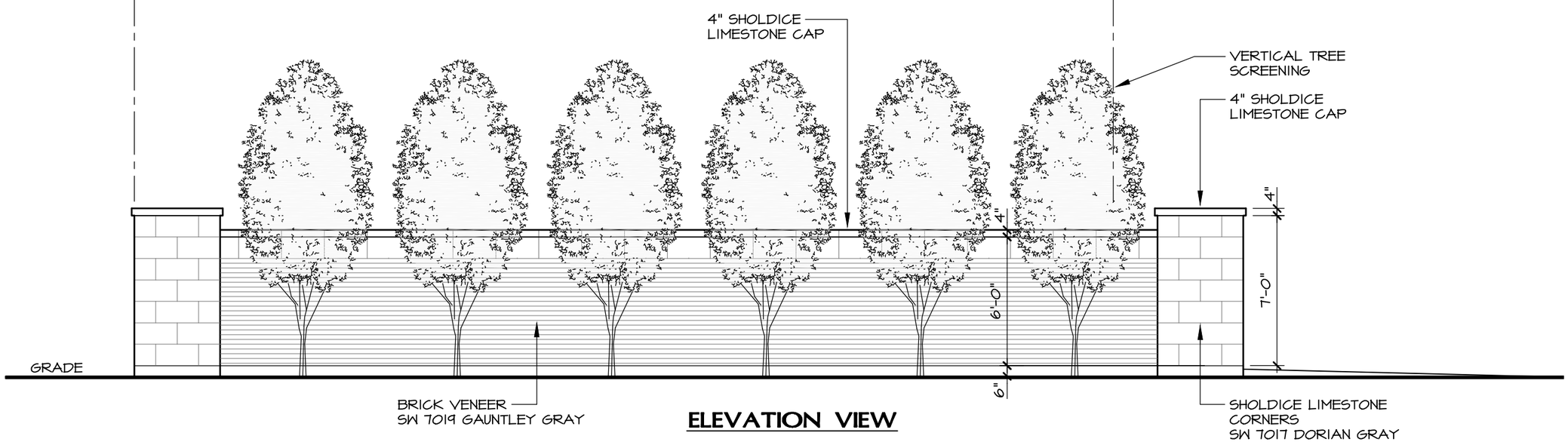

ELEVATION VIEW

TRASH ENCLOSURE 3/16" = 1'-0"

THE LOFTS AT INDIAN MEADOWS – TRASH ENCLOSURE PLAN

VCARVE CONSTRUCTIONS

ARCHITREND 10 / 24 / 17

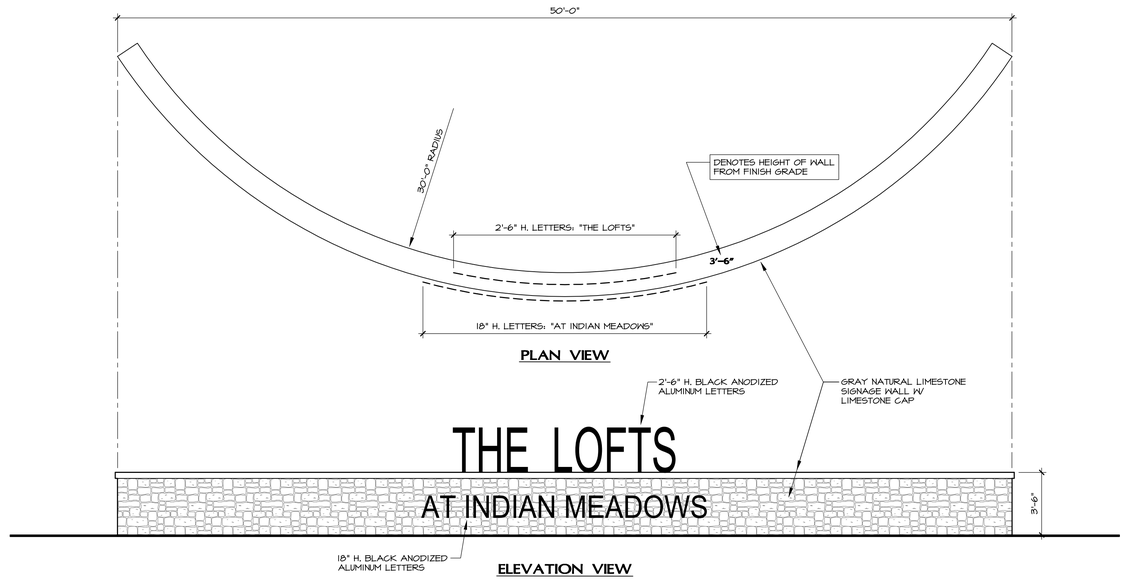

(2) ENTRANCE SIGNS 1/4" = 1'-0"

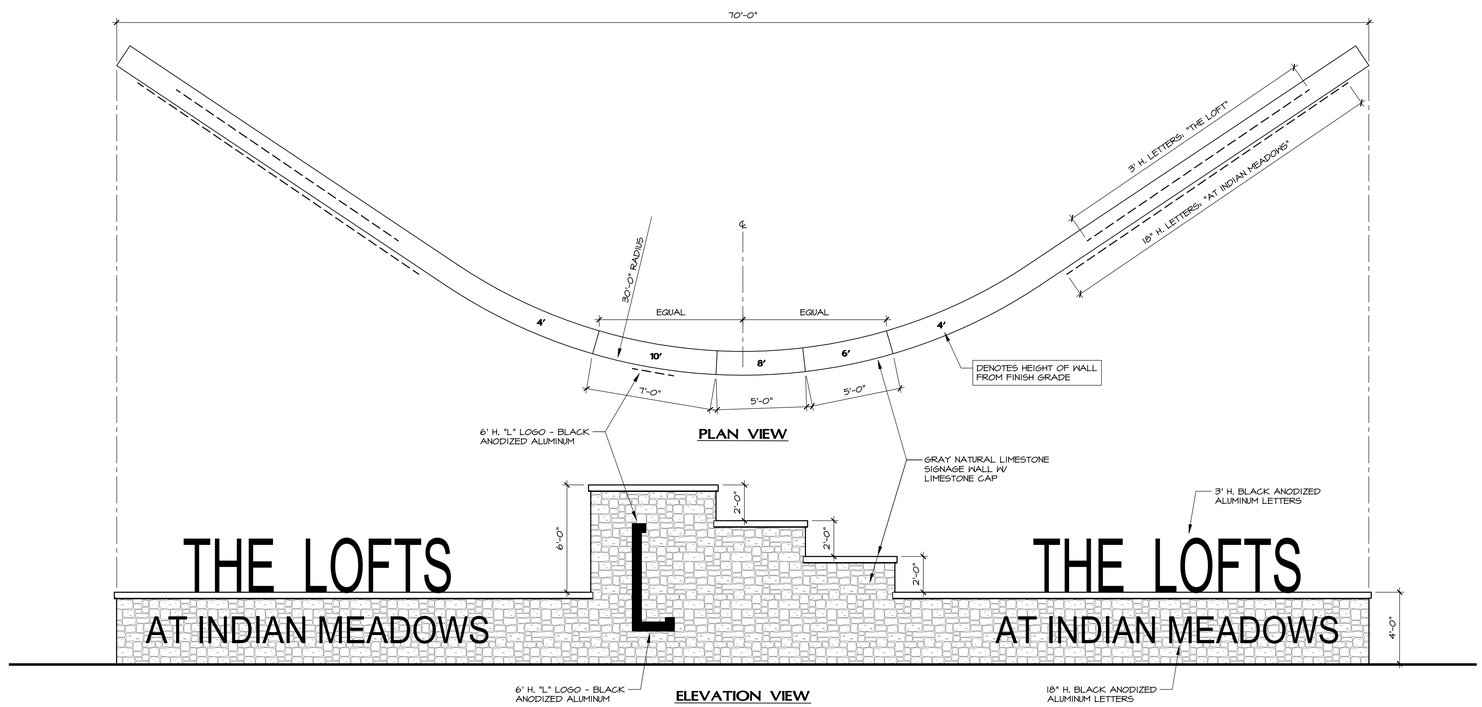

GATEWAY SIGN 1/4" = 1'-0"

The Lofts at Indian Meadows

MIXED-USE DEVELOPMENT
FAIRFIELD TOWNSHIP, OH

Rte. 4 & Indian Meadows Dr.
Hamilton, OH 45011

BUILDER / DEVELOPER:

VCARVE
CONSTRUCTIONS, LLC

Sam Echuri

1941 Alda Court
Dayton, OH 45459

937.546.5687

ARCHITREND
JIM BAUMAN DESIGN

ARCHITECTURE | DESIGN
977 W. Main Street | Tipp City, OH 45371

www.Architrend.design
jim@architrend.design 937.609.1962

© Copyright 2016 Architrend LLC

STRUCTURE
937.694.4605

#	DATE	RELEASE / REVISION
	10/11/17	PROPOSED CONCEPT

The Lofts at Indian Meadows

SIGNAGE

C-1710

PD1